Propietary data, Company confidential.
all rights reserved

Als Betriebsgeheimnis anvertraut
alle Rechte vorbehalten

HIERARCHY	SHEET	PDF-SHEET
A5B00900212935-37587	index	sheet 1
	netlist1	sheet 2
	netlist2	sheet 3
	poslist1	sheet 4
	page1	----
	sheet1	sheet 5
	sheet2	sheet 6
	sheet4	sheet 7
	sheet10	sheet 8
	sheet11	sheet 9
	sheet12	sheet 10
	sheet13	sheet 11
	sheet14	sheet 12
	sheet15	sheet 13
	sheet16	sheet 14
	sheet17	sheet 15
	sheet19	sheet 16
	sheet21	sheet 17
	sheet22	sheet 18
	sheet23	sheet 19
	sheet27	sheet 20
	sheet35	sheet 21
	sheet38	sheet 22
	sheet39	sheet 23
	sheet48	sheet 24
	sheet49	sheet 25
	sheet51	sheet 26
	sheet54	sheet 27

VERS.	CHANGE NUMBER	DATE	NAME
3	37770	27.03.2006	rba
2	37587	21.03.2006	rba
1	36658	02.03.2006	rba

DATE	17.10.2005
USER	Bak
APPR'D	

MP PD HW 4 AAL

BENQ mobile

Philippe
Variante 1
TOP HIERARCHY LEVEL
SCHEMATIC

1:1

261945

index

(Created by BOM number: A5B00900212937-37770)

Proprietary data, company confidential.
All rights reserved

Als Betriebsgeheimnis anvertraut
Alle Rechte vorbehalten

1.5V_DSP
/sheet13 12 A
/sheet13 8 B
/sheet11 9 C

1.5V_UC
/sheet13 8 B
/sheet13 11 A
/sheet11 7 A
/sheet11 9 C

1.8V_MEM1
/sheet13 8 B
/sheet4 12 A
/sheet4 9 A
/sheet11 9 D
/sheet12 11 E
/sheet48 7 C
/sheet54 11 A

1.8V_MEM2
/sheet13 8 B
/sheet13 8 C
/sheet4 14 F
/sheet12 11 D
/sheet12 13 B
/sheet12 12 E
/sheet12 10 B
/sheet12 10 B

2.65V
/page1 2 C
/sheet15 11 E
/sheet14 7 C
/sheet13 3 D
/sheet13 8 B
/sheet4 14 F
/sheet11 4 A
/sheet11 4 A
/sheet11 4 A
/sheet11 4 A
/sheet11 7 B
/sheet11 9 B
/sheet11 2 B
/sheet10 12 A
/sheet10 2 D
/sheet10 15 D
/sheet10 2 A
/sheet54 5 A
/sheet51 3 A
/sheet51 4 B
/sheet51 5 B

2.9V
/sheet13 11 B
/sheet13 10 B
/sheet13 8 B
/sheet4 14 F
/sheet4 12 A
/sheet4 9 A
/sheet11 7 A
/sheet11 7 A
/sheet12 11 D
/sheet22 9 B
/sheet51 5 B

A(0:24)
/sheet10 12 G
/sheet12 15 E
/sheet12 11 C
/sheet12 7 C

AC_CTS
/sheet15 13 E
/sheet10 14 C

AC_DCD
/sheet15 13 E
/sheet10 6 B

AC_RTS
/sheet15 13 E
/sheet10 14 C

AC_RX
/sheet15 13 E
/sheet10 14 C

AC_TX
/sheet15 13 E
/sheet10 13 C

ADV
/sheet10 6 G
/sheet12 15 E
/sheet12 10 B

AKKU_TYP
/sheet14 7 C
/sheet10 11 B

BATT+
/sheet15 11 E
/sheet14 7 C
/sheet13 1 A
/sheet13 3 B
/sheet13 12 G
/sheet13 2 B
/sheet13 3 C
/sheet13 3 C
/sheet13 3 E
/sheet13 12 C
/sheet13 3 A
/sheet13 3 B
/sheet4 9 B
/sheet4 12 B
/sheet10 15 F
/sheet21 6 C
/sheet35 7 D
/sheet48 6 A
/sheet38 8 D

BATT+_ATI
/sheet13 2 A
/sheet54 1 B

BATT_DCDC
/sheet13 2 B
/sheet13 10 D

BB_SIN26M
/sheet4 2 C
/sheet4 4 C
/sheet10 2 F
/sheet39 11 C

BC0
/sheet10 7 G
/sheet12 15 E
/sheet12 11 C

BC1
/sheet10 7 G
/sheet12 15 F
/sheet12 11 C

BFCLKI
/sheet10 7 G
/sheet12 11 B

BFCLKO
/sheet10 7 G
/sheet12 11 B

BREF
/sheet10 15 B
/sheet10 12 B

BT_CTS
/sheet4 10 E
/sheet10 14 D
/sheet51 2 C

BT_PCM_CLK
/sheet4 10 F
/sheet10 14 E
/sheet51 2 C

BT_PCM_IN
/sheet4 10 F
/sheet10 14 E
/sheet51 2 C

BT_PCM_OUT
/sheet4 10 F
/sheet10 14 E
/sheet51 2 C

BT_PCM_SYNC
/sheet4 10 F
/sheet10 14 E
/sheet51 2 C

BT_RESET
/sheet13 7 D
/sheet4 10 F
/sheet51 2 D

BT_RTS
/sheet4 10 E
/sheet10 13 D
/sheet51 1 C

BT_SIN26M
/sheet4 10 D
/sheet4 10 D
/sheet39 13 B
/sheet51 10 D

BT_TX
/sheet4 10 E
/sheet10 14 F
/sheet51 1 C

BT_TX_DEBUG
/sheet51 5 E

BT_VCXOEN
/sheet13 2 D
/sheet4 10 F
/sheet51 2 D

BT_WAKEUP_GSM
/sheet4 10 F
/sheet10 5 G
/sheet51 2 B

CAM_CLKOUT
/sheet35 2 B
/sheet54 2 E

CAM_DATA0
/sheet35 8 B
/sheet54 4 D

CAM_DATA1
/sheet35 8 B
/sheet54 4 E

CAM_DATA2
/sheet35 8 B
/sheet54 4 E

CAM_DATA3
/sheet35 8 B
/sheet54 4 E

CAM_DATA4
/sheet35 8 B
/sheet54 4 E

CAM_DATA5
/sheet35 8 B
/sheet54 4 E

CAM_DATA6
/sheet35 8 B
/sheet54 4 E

CAM_DATA7
/sheet35 8 B
/sheet54 4 E

CAM_HSYNC
/sheet35 8 B
/sheet54 4 E

CAM_PCLK
/sheet35 2 B
/sheet54 4 D

CAM_SCL
/sheet35 2 B
/sheet54 4 E

CAM_SDA
/sheet35 2 B
/sheet54 4 E

CAM_VSYNC
/sheet35 8 B
/sheet54 4 E

CAS
/sheet10 6 G
/sheet12 15 E
/sheet12 11 C

CHARGE_CNTRL
/sheet13 10 G
/sheet13 7 D

CHARGE_SOURCE
/sheet13 10 G
/sheet13 7 D

CIF_D0
/sheet10 4 B
/sheet54 13 B

CIF_D1
/sheet10 5 B
/sheet54 13 B

CIF_D2
/sheet10 5 B
/sheet54 13 B

CIF_D3
/sheet10 5 B
/sheet54 13 B

CIF_D4
/sheet10 5 B
/sheet54 13 B

CIF_D5
/sheet10 5 B
/sheet54 13 B

CIF_D6
/sheet10 5 B
/sheet54 13 B

CIF_D7
/sheet10 5 B
/sheet54 13 B

CIF_PCLK
/sheet10 5 B
/sheet54 15 E

CIF_PD
/sheet10 6 B
/sheet35 6 D

CKE
/sheet10 7 G
/sheet12 15 E
/sheet12 11 B

CLK32
/sheet4 10 F
/sheet10 6 B
/sheet54 12 A
/sheet51 2 D

CS0_FLASH
/sheet10 7 G
/sheet12 15 F
/sheet12 10 A

CS1_SDRAM
/sheet10 8 G
/sheet12 15 F
/sheet12 11 B

CS2_FLASH
/sheet10 8 G
/sheet12 15 F
/sheet12 10 A

CS3_MEMORY
/sheet10 8 G
/sheet12 10 A

CTS
/sheet15 11 A
/sheet15 10 E

D(0:15)
/sheet10 10 G
/sheet12 15 B
/sheet12 7 D

DB_ETMCLK
/sheet10 3 E

DB_ETMSYNC
/sheet10 4 E

DB_RTCK
/sheet10 3 D

DB_TCK
/page1 3 D
/sheet10 3 D

DB_TDI
/page1 3 C
/sheet10 3 D

DB_TDO
/sheet10 3 D

DB_TMS
/page1 3 C
/sheet10 3 D

DB_TRACEPKT2
/sheet10 3 E

DB_TRACEPKT4
/sheet10 4 E

DB_TRACEPKT5
/sheet10 4 E

DB_TRACEPKT6
/sheet10 4 E

DB_TRACEPKT7
/sheet10 4 E

DB_TRST
/page1 3 D
/sheet10 3 D

DCD
/sheet15 10 E
/sheet15 11 B

DCS_RX1
/sheet39 1 C
/sheet38 9 B

DCS_RX2
/sheet39 1 C
/sheet38 9 B

DIF_BYPASS
/sheet10 5 B
/sheet54 13 C

DIF_CD
/sheet10 3 C
/sheet54 13 C

DIF_CS1
/sheet10 3 C
/sheet54 13 E

DIF_CS2
/sheet10 3 C
/sheet54 15 E

DIF_D0
/sheet10 3 C
/sheet54 13 B

DIF_D1
/sheet10 3 C
/sheet54 13 C

DIF_D2
/sheet10 3 C
/sheet54 13 C

DIF_D3
/sheet10 3 C
/sheet54 13 C

DIF_D4
/sheet10 3 C
/sheet54 13 C

DIF_D5
/sheet10 3 C
/sheet54 13 C

DIF_D6
/sheet10 3 C
/sheet54 13 C

DIF_D7
/sheet10 3 C
/sheet54 13 C

DIF_RD
/sheet10 3 C
/sheet54 15 E

DIF_RESET
/sheet10 6 B
/sheet54 15 E

DIF_WR
/sheet10 3 C
/sheet54 15 E

DISP_CD
/sheet4 12 A
/sheet4 9 A
/sheet22 9 B
/sheet54 11 F

DISP_CS1
/sheet4 12 A
/sheet4 9 A
/sheet22 9 B
/sheet54 11 F

DISP_D0
/sheet4 12 A
/sheet4 9 A
/sheet22 9 B
/sheet54 10 F

DISP_D1
/sheet22 9 C
/sheet54 10 F

DISP_D2
/sheet4 12 A
/sheet4 9 A
/sheet22 9 C
/sheet54 10 F

DISP_D3
/sheet22 9 C
/sheet54 10 F

DISP_D4
/sheet22 9 C
/sheet54 10 F

DISP_D5
/sheet22 9 C
/sheet54 10 F

DISP_D6
/sheet22 9 C
/sheet54 10 F

DISP_D7
/sheet22 9 C
/sheet54 10 F

DISP_RD
/sheet22 9 B
/sheet54 11 F

DISP_RESET1
/sheet4 12 A
/sheet4 9 A
/sheet22 9 B
/sheet54 11 F

DISP_VD
/sheet22 9 B
/sheet54 11 F

DISP_WR
/sheet22 9 B
/sheet54 11 F

DMIXIN
/sheet39 1 D
/sheet38 13 D

DVDD_CAMERA
/sheet35 9 D
/sheet35 4 C
/sheet35 2 B

EXTBOOST_EN
/sheet13 7 D
/sheet13 10 B

EXT_FL_TRIG
/sheet10 3 D
/sheet54 7 F

F32K
/sheet10 2 F

FLASH_RESET
/sheet13 7 C
/sheet10 4 F
/sheet12 10 B

F_VPP
/sheet12 13 B

GND_MIC
/sheet15 11 B
/sheet13 8 H
/sheet19 6 D

GSM_RX1
/sheet39 1 C
/sheet38 9 B

GSM_RX2
/sheet39 1 C
/sheet38 9 B

HF_OUT_BT2
/sheet51 10 B

HW_DET_BAND_SEL
/sheet10 2 B
/sheet10 3 E

HW_DET_BLUETOOTH
/sheet10 2 A
/sheet10 3 E

HW_DET_MOB_TYPE1
/sheet10 2 A
/sheet10 3 E

I2C_CLK
/sheet13 3 F

I2C_DAT
/sheet13 3 F
/sheet10 14 E

I2S2_CLK0_TX
/sheet10 14 E
/sheet54 7 F

I2S2_CLK1_RX
/sheet10 14 E
/sheet54 7 F

I2S2_RX
/sheet10 14 E
/sheet54 8 F

I2S2_RXCLO
/sheet13 3 F
/sheet54 8 F

I2S2_RXDAO
/sheet13 3 F
/sheet54 8 F

I2S2_RXWAO
/sheet13 3 F
/sheet54 8 F

I2S2_TX
/sheet10 14 F
/sheet54 7 F

I2S2_TXCLO
/sheet13 8 F
/sheet54 8 F

I2S2_TXDAO
/sheet13 8 F
/sheet54 9 F

I2S2_TXWAO
/sheet13 8 F
/sheet54 9 F

I2S2_WA0_TX
/sheet10 14 F
/sheet54 7 F

I2S2_WA1_RX
/sheet10 14 F
/sheet54 8 F

IR_BT_RX
/sheet4 10 E
/sheet10 14 D
/sheet51 2 C

IR_SEL
/sheet10 8 B

IR_TX
/sheet10 13 D

KB_ON_OFF
/sheet13 2 C
/sheet27 2 B

KP_IN0
/sheet13 7 C
/sheet10 5 G
/sheet27 2 C

KP_IN1
/sheet10 5 G
/sheet27 2 C
/sheet27 4 E

KP_IN2
/sheet10 5 G
/sheet27 2 C
/sheet27 4 E

KP_IN3
/sheet10 5 G
/sheet27 2 C
/sheet27 2 E

KP_IN4
/sheet10 5 G
/sheet27 2 C
/sheet27 2 E

KP_IN5_OUT6
/sheet10 5 G
/sheet27 2 B

KP_OUT0
/sheet11 2 C
/sheet10 5 G
/sheet27 2 C

KP_OUT1
/sheet10 5 G
/sheet27 2 C

KP_OUT2
/sheet10 6 G
/sheet27 2 C

KP_OUT3
/sheet10 6 G
/sheet27 2 B

LED_FL_EN
/sheet54 5 F
/sheet49 4 C

LED_FL_OFF
/sheet13 9 B
/sheet10 7 B
/sheet49 4 B

LED_FL_TRIG
/sheet54 6 F
/sheet49 4 D

LIGHT_DISP
/sheet4 12 B
/sheet4 9 B
/sheet22 9 B
/sheet23 4 B

LIGHT_KP
/sheet23 4 E
/sheet27 2 B

LIGHT_PWM1
/sheet13 7 D
/sheet23 1 B

LIGHT_PWM2
/sheet13 7 D
/sheet23 1 D

MIC1A
/sheet13 1 E
/sheet10 10 A
/sheet19 7 C

MIC1B
/sheet13 1 E
/sheet10 9 A
/sheet19 7 C

MICBIAS_F
/sheet15 11 C
/sheet13 7 E
/sheet19 7 B

MICEA
/sheet15 11 B
/sheet13 1 E
/sheet10 10 A

MICEB
/sheet15 11 B
/sheet13 1 E
/sheet10 10 A

MMCI_CD
/sheet10 14 F
/sheet48 1 B

MMCI_CLK
/sheet10 13 B
/sheet48 1 B

MMCI_CMD
/sheet10 12 B
/sheet48 1 B

MMCI_DAT0
/sheet10 12 B
/sheet48 1 B

MMC_VCC
/sheet48 9 A
/sheet48 3 A

MMC_VCC_EN
/sheet10 6 G
/sheet48 5 A

MM_EN
/sheet10 14 E
/sheet54 1 B

MM_INT0
/sheet10 6 B
/sheet54 15 E

MM_INT1
/sheet10 6 B
/sheet54 15 E

MON1
/sheet10 3 D

MON2
/sheet10 3 D

MONO1_LP_OUT
/sheet13 3 E
/sheet13 7 E

MONO1_OUT
/sheet17 8 B
/sheet13 8 E

MONO2_LP_OUT
/sheet13 3 E
/sheet13 7 E

MONO2_OUT
/sheet17 8 C
/sheet13 8 E

OSC32K
/sheet10 2 F

PARAMP
/sheet39 1 D
/sheet38 1 F

PCS_RX1
/sheet39 1 B
/sheet38 9 B

PCS_RX2
/sheet39 1 B
/sheet38 9 B

PHANTOM_BUF_OUT
/sheet15 11 B
/sheet13 7 E

PM_CHARGE_UC
/sheet13 2 D
/sheet10 7 B

PM_INT
/sheet13 7 F
/sheet10 14 E

PM_POWER_ON
/sheet13 3 C
/sheet13 7 C

PM_RESET_N
/sheet13 7 C
/sheet10 3 F

PM_RF2_EN
/sheet13 2 C
/sheet10 7 B

PM_RINGIN
/sheet13 3 E
/sheet10 8 B

PM_RTC_INT
/sheet13 2 C
/sheet10 4 F

PM_SIN26M
/sheet13 3 E
/sheet4 4 E
/sheet4 2 E
/sheet39 6 A

PM_SSC_CS
/sheet13 4 F
/sheet10 7 B

PM_SSC_MRST
/sheet13 7 F
/sheet10 14 D

PM_SSC_MTSR
/sheet13 4 F
/sheet10 14 D

PM_SSC_SCLK
/sheet13 4 F
/sheet10 14 D

PM_WADOG
/sheet13 2 D
/sheet10 6 B

PM_WADOG2
/sheet13 2 D

POWER
/sheet15 11 B
/sheet13 10 G

RAS
/sheet10 6 G
/sheet12 15 E
/sheet12 11 C

RD
/sheet10 7 G
/sheet12 15 E
/sheet12 10 B

REF_GND
/sheet13 3 A
/sheet13 6 G

RF_AFC
/sheet4 4 B
/sheet4 2 B
/sheet10 2 F
/sheet39 15 C

RF_ANT_DET
/sheet4 2 D
/sheet4 4 D
/sheet10 7 A
/sheet38 6 B

RF_BAND_SW
/sheet4 2 E
/sheet4 4 E
/sheet10 7 B
/sheet38 6 E

RF_CLK
/sheet4 4 A
/sheet4 2 A
/sheet10 8 B
/sheet39 11 C

RF_DAT
/sheet4 4 A
/sheet4 2 A
/sheet10 8 B
/sheet39 11 C

RF_FE_CTR_DCS
/sheet4 2 B
/sheet4 4 B
/sheet10 7 B
/sheet38 14 B

RF_FE_CTR_GSM
/sheet4 4 C
/sheet4 2 C
/sheet10 7 B
/sheet38 14 B

RF_FE_CTR_RX
/sheet4 2 B
/sheet4 4 B
/sheet10 7 B
/sheet38 14 B

RF_I
/sheet4 2 B
/sheet4 4 B
/sheet10 9 B
/sheet39 8 E

RF_IX
/sheet4 2 B
/sheet4 4 B
/sheet10 9 B
/sheet39 8 E

RF_Q
/sheet4 2 B
/sheet4 4 B
/sheet10 9 B
/sheet39 8 E

RF_QX
/sheet4 4 B
/sheet4 2 B
/sheet10 9 B
/sheet39 8 E

RF_RAMP1
/sheet4 2 C
/sheet4 4 C
/sheet10 9 A
/sheet39 1 F

RF_STR
/sheet4 2 A
/sheet4 4 A
/sheet10 8 B
/sheet39 10 B

RF_TPA_DIG
/sheet4 2 E
/sheet4 4 E
/sheet10 3 D
/sheet38 1 E

RTS
/sheet15 11 A
/sheet15 10 E

RX
/sheet15 10 E
/sheet15 11 A

SDCLKI
/sheet10 7 G
/sheet12 10 C

SDCLKO
/sheet10 6 G
/sheet12 11 C

SENSE_IN1
/sheet13 12 F
/sheet13 2 D

SENSE_IN2
/sheet13 12 F
/sheet13 2 D

SERIAL_EN
/sheet15 11 E
/sheet10 8 B

SIM_CLK
/sheet16 10 C
/sheet10 13 C

SIM_IO
/sheet16 10 C
/sheet10 13 C

SIM_RST
/sheet16 10 C
/sheet10 13 C

STEPDOWN_GND
/sheet13 6 F
/sheet13 11 A
/sheet13 11 A
/sheet13 3 B
/sheet13 8 H

STEPUP_GND
/sheet13 9 H
/sheet13 12 D

STEREO1_OUT
/sheet15 11 B
/sheet13 7 E

STEREO2_OUT
/sheet15 11 B
/sheet13 7 E

TRIG_IN
/sheet10 3 D

TVCXO
/sheet4 2 C
/sheet4 4 C
/sheet10 15 A
/sheet10 11 B
/sheet39 15 C

TX
/sheet15 10 E
/sheet15 11 A

TXOUTD
/sheet39 1 E
/sheet38 1 F

TXOUTG
/sheet39 1 E
/sheet38 1 F

TX_ON
/sheet39 1 F
/sheet38 1 F

USB_D+
/sheet15 11 D
/sheet10 13 C

USB_D-
/sheet15 11 D
/sheet10 13 C

USB_MODE
/sheet15 11 D
/sheet13 8 B

VAFL
/sheet13 3 E
/sheet10 11 A

VAFR
/sheet13 3 E
/sheet10 11 A

VAUDREGA
/sheet13 3 E
/sheet13 8 C
/sheet13 3 C

VBAT
/sheet10 11 B
/sheet10 15 F

VBOOST

				DATE	17.10.2005
				USER	Bak
				APPR'D	
				MP PD HW 4 AAL	
3	37770	27.03.2006	rba	BENQ mobile	
2	37587	21.03.2006	rba		
1	36658	02.03.2006	rba		
VERS.	CHANGE NUMBER	DATE	NAME		

Philippe
Variante 1
TOP HIERARCHY LEVEL
SCHEMATIC

1:1

261945

netlist1

(Created by BOM number: A5B00900212937-37770)

Proprietary data, company confidential.
All rights reserved

Als Betriebsgeheimnis anvertraut
Alle Rechte vorbehalten

1	2	3	4	5

/sheet13 12 D
/sheet4 9 B
/sheet4 12 B
/sheet22 9 B
/sheet27 2 C
/sheet49 8 A

VBUCK
/sheet13 12 A

VBUCK_FB
/sheet13 10 A
/sheet13 2 C

VBUCK_LX
/sheet13 10 A
/sheet13 6 B

VCXOEN_UC
/sheet13 2 C
/sheet10 4 F

VDD_AFC
/sheet13 8 C
/sheet11 4 A

VDD_BT
/sheet13 8 C
/sheet4 14 F
/sheet51 2 A
/sheet51 4 B

VDD_BT_RF2
/sheet51 1 A
/sheet51 5 B

VDD_CHARGE
/sheet13 2 D
/sheet13 10 G

VDD_RF1
/sheet13 8 C
/sheet4 4 D
/sheet4 2 D
/sheet39 10 B
/sheet39 1 A
/sheet39 13 B

VDD_RF2
/sheet13 8 C
/sheet4 2 D
/sheet4 4 D
/sheet39 1 E
/sheet39 1 B
/sheet38 5 B
/sheet38 6 E

VDD_RTC
/sheet13 2 C
/sheet13 8 B
/sheet11 7 A

VDD_SIM
/sheet16 10 C
/sheet13 8 B

VDD_USB
/sheet13 8 B
/sheet11 7 A

VDD_VIBRA
/sheet13 8 B
/sheet21 4 C

VREFEXS_GND
/sheet13 2 E
/sheet13 4 F

VSIM1CTRL
/sheet13 9 B
/sheet13 7 D

WAIT
/sheet10 6 G
/sheet12 10 A

WR
/sheet10 7 G
/sheet12 15 E
/sheet12 10 B
/sheet12 11 C

A B C D E

				DATE	17.10.2005	Philippe Variante 1 TOP HIERARCHY LEVEL SCHEMATIC	1:1
				USER	Bak		
				APPR'D			
				MP PD HW 4 AAL			
3	37770	27.03.2006	rba	BENQ mobile		261945	netlist2
2	37587	21.03.2006	rba				
1	36658	02.03.2006	rba				
VERS.	CHANGE NUMBER	DATE	NAME	(Created by BOM number: A5B00900212937-37770)			

Proprietary data, company confidential.
All rights reserved

Als Betriebsgeheimnis anvertraut
Alle Rechte vorbehalten

C1000 /sheet10 2 E	C1331-1 /sheet13 6 A	C2215 /sheet22 4 D	C3951 /sheet39 11 D	L5102 /sheet51 8 D	R3806 /sheet38 14 D	V2302 /sheet23 3 B
C1001 /sheet10 2 F	C1332-1 /sheet13 8 A	C2216 /sheet22 4 D	C3952 /sheet39 4 B	L5103 /sheet51 7 C	R3812 /sheet38 10 D	V2330 /sheet23 3 E
C1002 /sheet10 1 F	C1332-2 /sheet13 7 A	C2217 /sheet22 2 D	C3953 /sheet39 2 B	L5104 /sheet51 7 C	R3813 /sheet38 10 D	V3961 /sheet39 13 C
C1003 /sheet10 1 F	C1333 /sheet13 6 E	C2226 /sheet22 5 D	C3954 /sheet39 2 C	L5105 /sheet51 7 C	R3814 /sheet38 12 E	V3962 /sheet39 12 B
C1004 /sheet10 8 A	C1334 /sheet13 6 E	C2320 /sheet23 2 B	C3961 /sheet39 11 C	L5149 /sheet51 10 C	R3815 /sheet38 12 E	V4901 /sheet49 5 B
C1005 /sheet10 7 A	C1335 /sheet13 6 E	C2321 /sheet23 4 C	C3962 /sheet39 13 C	L5416 /sheet54 3 E	R3816 /sheet38 4 E	V4902 /sheet49 7 B
C1008 /sheet10 15 E	C1338 /sheet13 8 A	C2330 /sheet23 2 D	C3963 /sheet39 13 C	N1330 /sheet13 11 C	R3827 /sheet38 2 F	V4903 /sheet49 7 C
C1009 /sheet10 15 E	C1340 /sheet13 7 C	C2702 /sheet27 2 B	C3964 /sheet39 13 C	N3501 /sheet35 7 D	R3833 /sheet38 12 C	V4904 /sheet49 8 D
C1011 /sheet10 12 B	C1344 /sheet13 8 B	C2703 /sheet27 2 B	C3965 /sheet39 14 C	N3800 /sheet38 9 C	R3834 /sheet38 13 B	X1000 /sheet10 1 G
C1013 /sheet10 15 G	C1347 /sheet13 7 E	C2704 /sheet27 3 B	C3966 /sheet39 14 C	N3801 /sheet38 7 F	R3901 /sheet39 4 F	X1300 /sheet13 1 G
C1038 /sheet10 2 D	C1348 /sheet13 7 E	C2705 /sheet27 3 B	C3970 /sheet39 2 A	N3911 /sheet39 4 C	R3902 /sheet39 3 D	X1400 /sheet14 4 C
C1040 /sheet10 3 F	C1349 /sheet13 3 E	C2706 /sheet27 3 B	C3971 /sheet39 2 B	N4800 /sheet48 6 A	R3903 /sheet39 4 D	X1504 /sheet15 1 B
C1070 /sheet10 9 A	C1351 /sheet13 12 C	C2707 /sheet27 3 B	C4800 /sheet48 8 A	N5400 /sheet54 2 C	R3904 /sheet39 4 D	X1604 /sheet16 1 D
C1071 /sheet10 10 B	C1352 /sheet13 12 B	C2708 /sheet27 3 B	C4801 /sheet48 8 A	R1006 /sheet10 2 F	R3905 /sheet39 4 F	X2200 /sheet22 1 C
C1072 /sheet10 11 A	C1354 /sheet13 11 A	C2709 /sheet27 4 B	C4803 /sheet48 3 C	R1008 /sheet10 7 G	R3916 /sheet39 6 D	X2201 /sheet22 2 E
C1073 /sheet10 11 A	C1355 /sheet13 12 D	C2710 /sheet27 4 B	C4804 /sheet48 3 C	R1009 /sheet10 7 G	R3917 /sheet39 6 D	X2705 /sheet27 5 B
C1074 /sheet10 10 A	C1356 /sheet13 11 C	C2711 /sheet27 4 B	C4805 /sheet48 3 C	R1012 /sheet10 9 A	R3922 /sheet39 6 B	X3500 /sheet35 4 B
C1075 /sheet10 10 B	C1357 /sheet13 11 D	C2712 /sheet27 4 B	C4806 /sheet48 6 C	R1014 /sheet10 12 B	R3923 /sheet39 6 B	X3800 /sheet38 6 B
C1110 /sheet11 4 A	C1358 /sheet13 12 B	C2713 /sheet27 4 B	C4900 /sheet49 5 A	R1018 /sheet10 15 B	R3924 /sheet39 7 B	X3803 /sheet38 1 C
C1120 /sheet11 7 B	C1359 /sheet13 11 A	C2714 /sheet27 5 B	C4901 /sheet49 5 C	R1021 /sheet10 15 B	R3925 /sheet39 9 D	X3805 /sheet38 1 D
C1121 /sheet11 7 B	C1360 /sheet13 11 G	C2720 /sheet27 4 E	C4902 /sheet49 7 B	R1022 /sheet10 15 F	R3950 /sheet39 2 E	X3813 /sheet38 2 C
C1122 /sheet11 6 A	C1361 /sheet13 12 G	C2721 /sheet27 4 E	C4904 /sheet49 8 B	R1023 /sheet10 15 G	R3951 /sheet39 3 E	X3823 /sheet38 3 C
C1123 /sheet11 6 A	C1362 /sheet13 12 G	C2723 /sheet27 2 E	C4905 /sheet49 8 B	R1024 /sheet10 15 D	R3952 /sheet39 3 E	X4800 /sheet48 10 C
C1124 /sheet11 5 A	C1363 /sheet13 12 D	C2724 /sheet27 2 E	C4906 /sheet49 8 D	R1025 /sheet10 15 D	R3961 /sheet39 13 B	X5100 /sheet51 1 E
C1125 /sheet11 5 A	C1364-1 /sheet13 7 C	C3512 /sheet35 4 A	C5100 /sheet51 4 B	R1038 /sheet10 12 A	R3962 /sheet39 13 C	Z1001 /sheet10 2 F
C1126 /sheet11 4 B	C1364-2 /sheet13 7 C	C3516 /sheet35 7 D	C5101 /sheet51 4 B	R1039 /sheet10 12 A	R3963 /sheet39 13 C	Z1501 /sheet15 10 E
C1128 /sheet11 4 B	C1367-2 /sheet13 7 C	C3517 /sheet35 7 D	C5102 /sheet51 2 A	R1041 /sheet10 2 A	R3964 /sheet39 14 C	Z1601 /sheet16 5 C
C1129 /sheet11 4 A	C1367-1 /sheet13 7 C	C3518 /sheet35 8 D	C5104 /sheet51 7 C	R1042 /sheet10 2 E	R3965 /sheet39 14 C	Z3961 /sheet39 13 C
C1130 /sheet11 4 A	C1371 /sheet13 4 A	C3534 /sheet35 3 A	C5106 /sheet51 5 B	R1043 /sheet10 2 E	R3966 /sheet39 15 C	Z5100 /sheet51 9 C
C1131 /sheet11 8 C	C1372 /sheet13 4 A	C3801 /sheet38 5 B	C5108 /sheet51 5 B	R1044 /sheet10 2 E	R3967 /sheet39 15 C	
C1132 /sheet11 8 C	C1373 /sheet13 4 A	C3802 /sheet38 4 B	C5111 /sheet51 7 C	R1045 /sheet10 2 B	R4800 /sheet48 6 B	
C1133 /sheet11 8 C	C1374 /sheet13 4 D	C3803 /sheet38 4 B	C5112 /sheet51 6 B	R1046 /sheet10 2 E	R4801 /sheet48 3 B	
C1134 /sheet11 5 A	C1381 /sheet13 3 E	C3804 /sheet38 3 B	C5113 /sheet51 9 C	R1047 /sheet10 2 E	R4802 /sheet48 3 B	
C1135 /sheet11 9 C	C1382 /sheet13 3 E	C3805 /sheet38 5 C	C5117 /sheet51 2 A	R1050 /sheet10 2 A	R4806 /sheet48 7 C	
C1136 /sheet11 8 D	C1383 /sheet13 1 E	C3806 /sheet38 13 D	C5120 /sheet51 3 A	R1052 /sheet10 2 B	R4807 /sheet48 6 C	
C1137 /sheet11 8 D	C1384 /sheet13 1 E	C3807 /sheet38 13 D	C5121 /sheet51 8 D	R1054 /sheet10 2 A	R4900 /sheet49 4 B	
C1138 /sheet11 9 C	C1385 /sheet13 1 E	C3808 /sheet38 15 D	C5122 /sheet51 7 D	R1055 /sheet10 2 B	R4901 /sheet49 4 C	
C1139 /sheet11 9 D	C1386 /sheet13 2 E	C3809 /sheet38 15 C	C5130 /sheet51 1 A	R1100 /sheet11 3 C	R4902 /sheet49 5 C	
C1140 /sheet11 7 B	C1391 /sheet13 6 E	C3810 /sheet38 7 E	C5148 /sheet51 10 C	R1130 /sheet11 6 A	R4903 /sheet49 8 B	
C1250 /sheet12 9 B	C1400 /sheet14 5 D	C3818 /sheet38 8 B	C5149 /sheet51 10 C	R1251 /sheet12 11 B	R4904 /sheet49 7 D	
C1251 /sheet12 12 C	C1402 /sheet14 6 D	C3819 /sheet38 7 B	C5400 /sheet54 5 A	R1252 /sheet12 10 B	R4905 /sheet49 6 C	
C1252 /sheet12 10 E	C1405 /sheet14 6 D	C3822 /sheet38 12 C	C5401 /sheet54 6 A	R1253 /sheet12 11 D	R4906 /sheet49 6 C	
C1254 /sheet12 11 E	C1426 /sheet14 6 C	C3829 /sheet38 12 C	C5402 /sheet54 7 A	R1254 /sheet12 11 B	R4907 /sheet49 8 C	
C1255 /sheet12 11 E	C1501 /sheet15 7 B	C3832 /sheet38 6 F	C5403 /sheet54 8 A	R1255 /sheet12 10 C	R4908 /sheet49 8 D	
C1256 /sheet12 9 D	C1502 /sheet15 7 B	C3857 /sheet38 5 F	C5404 /sheet54 8 A	R1300 /sheet13 4 B	R4909 /sheet49 6 D	
C1257 /sheet12 10 D	C1504 /sheet15 3 A	C3859 /sheet38 6 F	C5405 /sheet54 9 A	R1302 /sheet13 3 B	R5101 /sheet51 5 B	
C1258 /sheet12 10 D	C1506 /sheet15 6 B	C3861 /sheet38 5 F	C5406 /sheet54 10 A	R1303 /sheet13 2 C	R5103 /sheet51 2 C	
C1259 /sheet12 10 D	C1507 /sheet15 5 A	C3862 /sheet38 8 D	C5407 /sheet54 10 A	R1309 /sheet13 7 D	R5110 /sheet51 9 C	
C1260 /sheet12 9 E	C1510 /sheet15 4 B	C3863 /sheet38 8 E	C5408 /sheet54 11 A	R1320 /sheet13 8 C	R5111 /sheet51 9 D	
C1261 /sheet12 10 E	C1512 /sheet15 7 B	C3868 /sheet38 8 E	C5410 /sheet54 1 C	R1340 /sheet13 12 B	R5122 /sheet51 8 D	
C1262 /sheet12 10 E	C1513 /sheet15 4 B	C3871 /sheet38 8 E	C5411 /sheet54 3 C	R1341 /sheet13 12 C	R5126 /sheet51 2 D	
C1263 /sheet12 11 E	C1514 /sheet15 6 B	C3901 /sheet39 5 B	C5412 /sheet54 3 C	R1342 /sheet13 12 D	R5400 /sheet54 10 A	
C1264 /sheet12 12 E	C1515 /sheet15 5 B	C3902 /sheet39 5 A	C5413 /sheet54 3 A	R1343 /sheet13 12 D	R5417 /sheet54 3 E	
C1265 /sheet12 10 D	C1516 /sheet15 5 B	C3904 /sheet39 4 B	C5414 /sheet54 3 A	R1344 /sheet13 12 G	TP1306 /sheet13 8 B	
C1301 /sheet13 3 A	C1523 /sheet15 5 A	C3905 /sheet39 5 B	C5415 /sheet54 9 A	R1353 /sheet13 11 G	TP1302 /sheet13 4 D	
C1302 /sheet13 4 A	C1524 /sheet15 4 B	C3906 /sheet39 5 B	C5416 /sheet54 3 E	R1360 /sheet13 10 C	TP1309 /sheet13 8 B	
C1303 /sheet13 4 A	C1525 /sheet15 6 B	C3907 /sheet39 3 C	C5417 /sheet54 10 A	R1399 /sheet13 6 C	TP1327 /sheet13 11 A	
C1304 /sheet13 2 B	C1526 /sheet15 5 B	C3908 /sheet39 4 C	C5418 /sheet54 9 A	R1500 /sheet15 2 B	TP1317 /sheet13 8 B	
C1305 /sheet13 2 B	C1541 /sheet15 5 B	C3909 /sheet39 3 C	C5419 /sheet54 4 A	R1501 /sheet15 3 B	TP1334 /sheet13 7 C	
C1306-1 /sheet13 3 B	C1548 /sheet15 4 B	C3910 /sheet39 4 C	C5420 /sheet54 2 F	R1502 /sheet15 3 B	TP1013 /sheet10 15 A	
C1306-2 /sheet13 3 B	C1598 /sheet15 2 G	C3911 /sheet39 2 C	D1000-2 /sheet11 3 D	R1505 /sheet15 3 B	TP1014 /sheet10 15 B	
C1307 /sheet13 2 B	C1599 /sheet15 2 G	C3912 /sheet39 2 C	D1000-1 /sheet10 12 F	R1506 /sheet15 8 B	TP1251 /sheet12 12 B	
C1308 /sheet13 3 D	C1605 /sheet16 9 D	C3914 /sheet39 8 B	D1250 /sheet12 8 D	R1507 /sheet15 9 B	TP1250 /sheet12 12 B	
C1309 /sheet13 4 D	C1705 /sheet17 5 C	C3915 /sheet39 7 B	D1300 /sheet13 4 F	R1508 /sheet15 10 B	TP2302 /sheet23 4 B	
C1310 /sheet13 4 D	C1708 /sheet17 5 C	C3916 /sheet39 3 C	D1301 /sheet13 9 C	R1512 /sheet15 6 A	TP3503 /sheet35 9 C	
C1311 /sheet13 4 D	C1709 /sheet17 5 C	C3917 /sheet39 4 D	D1302 /sheet13 10 C	R1524 /sheet15 11 B	TP4800 /sheet48 8 A	
C1312 /sheet13 4 D	C1710 /sheet17 6 B	C3918 /sheet39 4 D	D5100 /sheet51 2 D	R1525 /sheet15 11 B	TP3901 /sheet39 6 C	
C1313 /sheet13 4 D	C1712 /sheet17 6 D	C3919 /sheet39 4 D	D5400 /sheet54 4 E	R1530 /sheet15 11 D	TP3802 /sheet38 5 F	
C1314 /sheet13 4 D	C1901 /sheet19 5 B	C3920 /sheet39 4 D	L1300 /sheet13 3 B	R1614 /sheet16 9 C	TP5101 /sheet51 10 C	
C1315-2 /sheet13 1 B	C1902 /sheet19 5 C	C3921 /sheet39 2 E	L1301 /sheet13 11 A	R1705 /sheet17 6 B	TP4900 /sheet49 7 B	
C1315-1 /sheet13 1 B	C1904 /sheet19 5 C	C3922 /sheet39 4 E	L1302 /sheet13 11 D	R1707 /sheet17 6 C	V1302 /sheet13 11 A	
C1316 /sheet13 7 C	C2100 /sheet21 5 C	C3923 /sheet39 4 F	L1318 /sheet13 2 A	R1901 /sheet19 6 C	V1303 /sheet13 11 D	
C1317 /sheet13 3 E	C2101 /sheet21 7 C	C3924 /sheet39 5 F	L1321 /sheet13 8 C	R1902 /sheet19 6 C	V1305-1 /sheet13 11 G	
C1318-1 /sheet13 1 B	C2201 /sheet22 3 D	C3925 /sheet39 5 D	L1503 /sheet15 8 B	R1926 /sheet19 7 C	V1305-2 /sheet13 11 G	
C1318-2 /sheet13 1 B	C2202 /sheet22 5 D	C3927 /sheet39 5 D	L1504 /sheet15 8 B	R1927 /sheet19 6 C	V1400 /sheet14 5 C	
C1319 /sheet13 3 E	C2203 /sheet22 3 D	C3928 /sheet39 6 D	L1591 /sheet15 9 B	R2310 /sheet23 2 B	V2100 /sheet21 6 C	
C1320 /sheet13 2 E	C2204 /sheet22 4 D	C3929 /sheet39 6 D	L3801 /sheet38 5 B	R2311 /sheet23 3 C		
C1321 /sheet13 3 E	C2205 /sheet22 4 D	C3931 /sheet39 5 F	L3802 /sheet38 4 B	R2331 /sheet23 2 D		
C1322 /sheet13 3 E	C2206 /sheet22 5 D	C3932 /sheet39 3 C	L3803 /sheet38 4 B	R2332 /sheet23 3 E		
C1323 /sheet13 2 E	C2207 /sheet22 5 D	C3933 /sheet39 3 C	L3804 /sheet38 3 B	R3505 /sheet35 4 B		
C1324 /sheet13 2 E	C2208 /sheet22 6 D	C3940 /sheet39 9 D	L3819 /sheet38 7 B	R3506 /sheet35 4 B		
C1325 /sheet13 3 E	C2209 /sheet22 6 D	C3941 /sheet39 9 C	L3901 /sheet39 2 B	R3539 /sheet35 6 D		
C1329-1 /sheet13 6 A	C2210 /sheet22 6 D	C3942 /sheet39 9 D	L3902 /sheet39 2 C	R3801 /sheet38 5 B		
C1329-2 /sheet13 6 A	C2211 /sheet22 6 D	C3943 /sheet39 10 D	L3903 /sheet39 5 D	R3802 /sheet38 5 B		
C1330-2 /sheet13 6 A	C2212 /sheet22 7 D	C3944 /sheet39 8 B	L3904 /sheet39 5 D	R3803 /sheet38 5 A		
C1330-1 /sheet13 6 A	C2213 /sheet22 3 D	C3949 /sheet39 10 B	L3905 /sheet39 2 C	R3804 /sheet38 4 A		
C1331-2 /sheet13 7 A	C2214 /sheet22 3 D	C3950 /sheet39 11 D	L5101 /sheet51 9 B	R3805 /sheet38 13 D		

VERS.	CHANGE NUMBER	DATE	NAME
3	37770	27.03.2006	rba
2	37587	21.03.2006	rba
1	36658	02.03.2006	rba

DATE	17.10.2005
USER	Bak
APPR'D	
MP PD HW 4 AAL	

BENQ mobile

Philippe
Variante 1
TOP HIERARCHY LEVEL
SCHEMATIC

1:1

261945

poslist1

(Created by BOM number: A5B00900212937-37770)

Proprietary data, company confidential.
All rights reserved

Als Betriebsgeheimnis anvertraut
Alle Rechte vorbehalten

This sheet was left intentional blank

				DATE	17.10.2005	Philippe Variante 1 TOP HIERARCHY LEVEL SCHEMATIC	1:1
				USER	Bak		
				APPR'D			
				MP PD HW 4 AAL			
3	37770	27.03.2006	rba	BENQ mobile		261945	sheet1
2	37587	21.03.2006	rba				
1	36658	02.03.2006	rba				
VERS.	CHANGE NUMBER	DATE	NAME	(Created by BOM number: A5B00900212937-37770)			

Propietary data, Company confidential.
all rights reserved

Als Betriebsgeheimnis anvertraut
alle Rechte vorbehalten

TABLE_OF_CONTENTS_PLATFORM

PAGE	BLOCK	STATUS
1	TOP HIERARCHICAL OVERVIEW	EMPTY
2	TABLE OF CONTENTS PLATFORM	
3	TABLE OF CONTENTS PROJECT	EMPTY
4	DEFINITION OF HIT POINTS	
5-8	DEFINITION OF HIT POINTS	EMPTY
9	DEBUG CONNECTOR	EMPTY
10	SGOLD2	
11	SGOLD2 SUPPLY DOMAIN	
12	SDRAM FLASH	
13	MOZART / TWIGO	
14	BATTERY CONNECTOR	
15	IO-CONNECTOR	
16	SIM-CONNECTOR	
17	SPEAKER SOLUTION 1	
19	MICROPHONE CIRCUIT 1	
21	VIBRA	
22	DISPLAY CONNECTOR	
23	DISPLAY/ KEYPAD BACKLIGHT CONTROL	
24	NIGHT DESIGN	
25	CLIPITS CONNECTION	
26	IRDA	
27	MMI CONNECTOR	
28	KEYPAD BACKLIGHT	
29	KEYPAD FOR SGOLD2	
30	KEYPAD FOR SLIDER	
32	OPEN/CLOSE DETECTION	
35	CAMERA INTERFACE	
38	ANTENNA CIRCUIT with small PA	
39	RF HITACHI BRIGHT	
41	FM RADIO WITH RDS	
42	BLUETOOTH SOLUTION 1	
43	AGPS	
44	AMBIENT LIGHT SENSOR	EMPTY
45	BAROMETER	
46	COMPASS	
48	MMC-READER	
49	LED FLASHLIGHT	
51	BLUETOOTH SOLUTION 2	
52	WLAN RF INTERFACE	
53	WLAN SOC INTERFACE	
58	ANTENNA CIRCUIT with large PA	

PAGE	BLOCK	STATUS
90	SGOLD2 testsocket	
91	SGOLD2 SUPPLY DOMAIN testsocket	
94	Keypad as components	
95	JUMPER PAGE	
98	NAND FLASH	
99	DEBUG	

ATTENTION: Page 29, 30 and 58

all components are only as circuit symbol available and not placed on the PCB

(Mentor property CLASS=N).

VERS.	CHANGE NUMBER	DATE	NAME		
				DATE	17.10.2005
				USER	Bak
				APPR'D	
				MP PD HW 4 AAL	
3	37770	27.03.2006	rba	BENQ mobile	
2	37587	21.03.2006	rba		
1	36658	02.03.2006	rba		

Philippe
Variante 1
TOP HIERARCHY LEVEL
SCHEMATIC

1:1

261945

sheet2

(Created by BOM number: A5B00900212937-37770)

Propietary data, Company confidential.
all rights reserved

Als Betriebsgeheimnis anvertraut
alle Rechte vorbehalten

HIT_POINTS LOGIK/HF_PART_1

HIT_POINTS LOGIK/HF

400-449

RF_STR	XG400	RF_STR	TRANCEIVER ENABLE SIGNAL
RF_CLK	XG401	RF_CLK	TRANCEIVER CLOCK SIGNAL
RF_DAT	XG402	RF_DAT	TRANCEIVER DATA SIGNAL
RF_I	XG403	RF_I	Bidirectional analoue RX/TX modulatet signal
RF_IX	XG404	RF_IX	
RF_Q	XG405	RF_Q	Baseband signals
RF_QX	XG406	RF_QX	
RF_AFC	XG409	RF_AFC	Reference freqency correction
RF_FE_CTR_RX	XG410	RF_FE_CTR_RX	
RF_FE_CTR_DCS	XG412	RF_FE_CTR_DCS	DCSTX enable Asic for Hitachisolution
RF_FE_CTR_GSM	XG417	RF_FE_CTR_GSM	GSMTX enable Asic for Hitachisolution
RF_RAMP1	XG413	RF_RAMP1	analogue power amplifier ramping signal
BB_SIN26M	XG414	BB_SIN26M	26 MHz reference frequency
TVCXO	XG416	TVCXO	Temperature sensor X-tal
			Temperature power amplifier
RF_ANT_DET	XG419	RF_ANT_DET	DETECTION internal/external Antenna
VDD_RF1	XG421	VDD_RF1	programmed voltage 1
VDD_RF2	XG418	VDD_RF2	programmed voltage 2
RF_BAND_SW	XG424	RF_BAND_SW	switched LOW- / HIGH-band
PM_SIN26M	XG408	PM_SIN26M	
RF_TPA_DIG	XG407	RF_TPA_DIG	

1.8V_MEM1	XG425	1.8V_MEM1
2.9V	XG426	2.9V
DISP_D2	XG427	DISP_D2
DISP_D0	XG428	DISP_D0
DISP_CD	XG429	DISP_CD
DISP_CS1	XG430	DISP_CS1
DISP_RESET1	XG431	DISP_RESET1
VBOOST	XG432	VBOOST
LIGHT_DISP	XG433	LIGHT_DISP
BATT+		BATT+

HIT_POINTS HF_PART_1/BLUETOOTH

XG454	BT_SIN26M	FUNK
XG461	BT_SIN26M	BB

HIT_POINTS LOGIK/BLUETOOTH

XG436	BT_TX	USART1_TXD
XG437	IR_BT_RX	USART1_RXD
XG438	BT_CTS	USART1_CTS
XG439	BT_RTS	USART1_RTS
XG440	BT_PCM_SYNC	I2S1_WA0
XG441	BT_PCM_IN	I2S1_TX
XG442	BT_PCM_OUT	I2S1_RX
XG443	BT_PCM_CLK	I2S1_CLK0
XG444	BT_RESET	
XG445	BT_VCXOEN	
XG446	BT_WAKEUP_GSM	KP_IN6
		DIF_RESET2
XG448	CLK32	CLK_32

XG449	GND
XG450	VDD_BT
XG451	1.8V_MEM2
XG452	2.9V
XG453	2.65V

				DATE	17.10.2005	Philippe Variante 1 TOP HIERARCHY LEVEL SCHEMATIC	1:1
				USER	Bak		
				APPR'D			
				MP PD HW 4 AAL			
3	37770	27.03.2006	rba	BENQ mobile		261945	sheet4
2	37587	21.03.2006	rba				
1	36658	02.03.2006	rba				
VERS.	CHANGE NUMBER	DATE	NAME	(Created by BOM number: A5B00900212937-37770)			

Propietary data, Company confidential.
all rights reserved

Als Betriebsgeheimnis anvertraut
alle Rechte vorbehalten

SGOLD2

1000-1099

HW_DET

NOTE:
For further products:
Do not copy schematic concerning C1011 from here.
Refer to plattform

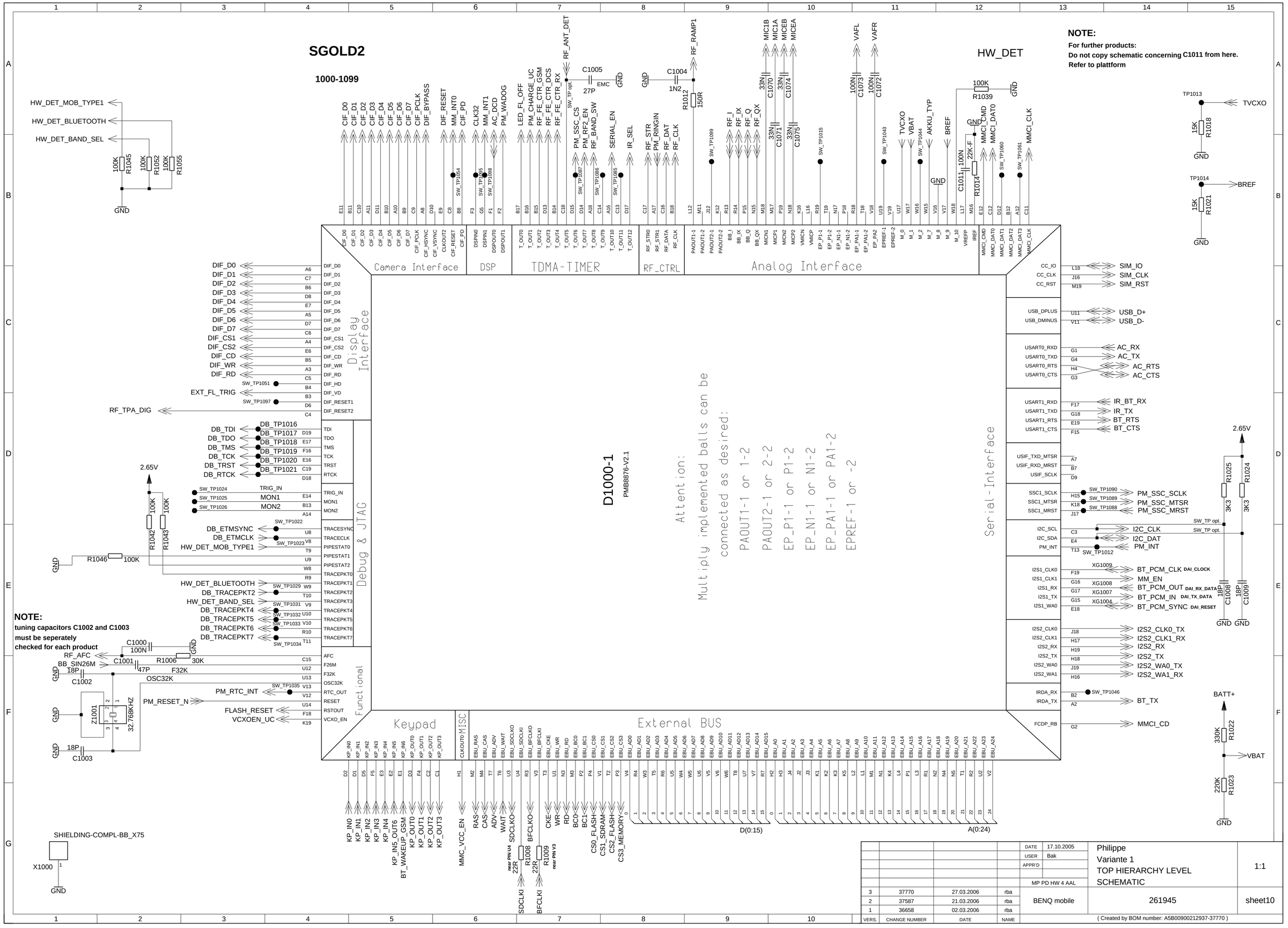

				DATE 17.10.2005	Philippe
				USER Bak	Variante 1
				APPR'D	TOP HIERARCHY LEVEL
				MP PD HW 4 AAL	SCHEMATIC
3	37770	27.03.2006	rba	BENQ mobile	261945
2	37587	21.03.2006	rba		
1	36658	02.03.2006	rba		
VERS.	CHANGE NUMBER	DATE	NAME		

1:1

sheet10

(Created by BOM number: A5B00900212937-37770)

Proprietary data, company confidential.
All rights reserved

Als Betriebsgeheimnis anvertraut
Alle Rechte vorbehalten

SGOLD2_SUPPLYDOMAIN

1100-1199

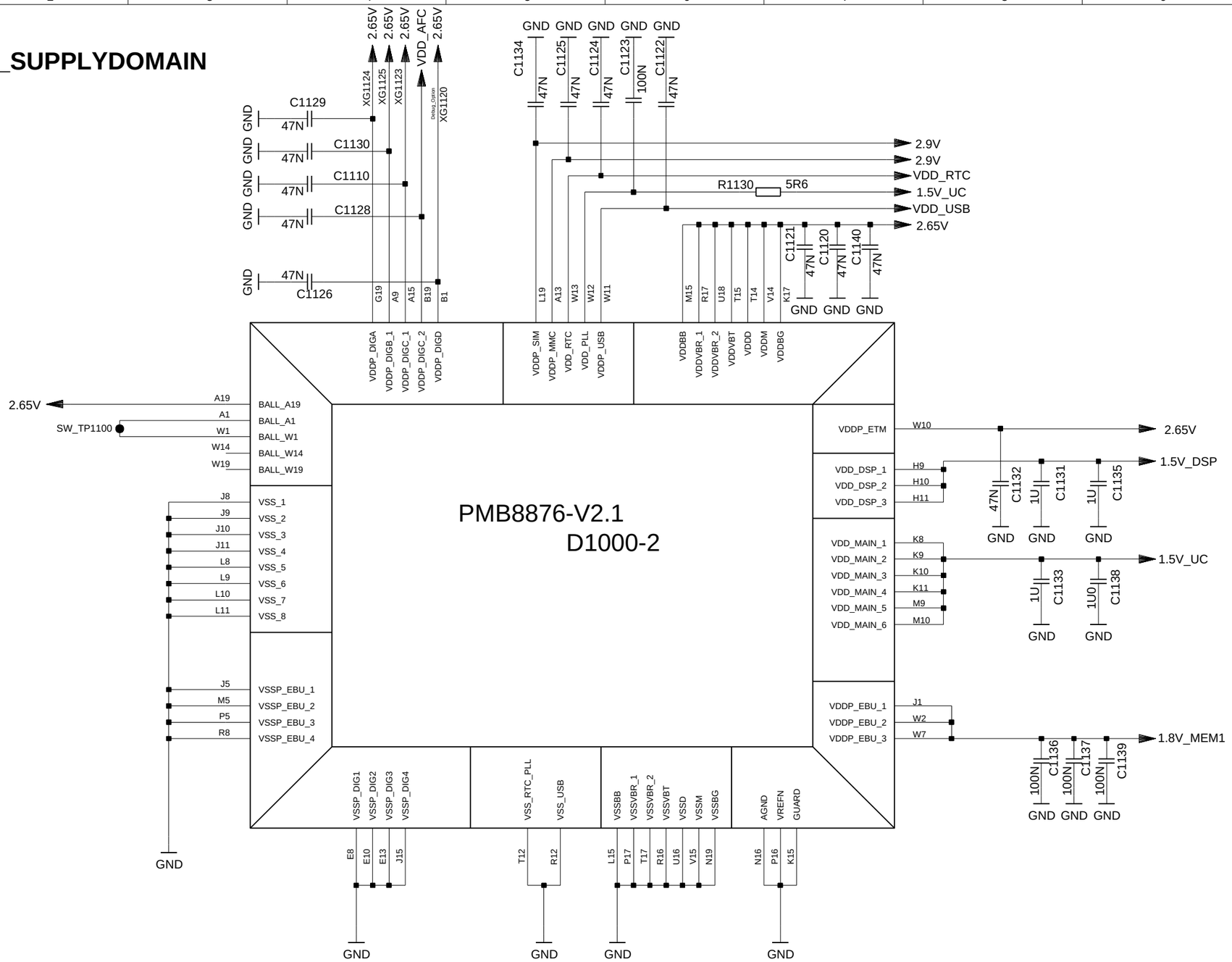

				DATE 17.10.2005	Philippe
				USER Bak	Variante 1
				APPR'D	TOP HIERARCHY LEVEL
				MP PD HW 4 AAL	SCHEMATIC
3	37770	27.03.2006	rba	BENQ mobile	261945
2	37587	21.03.2006	rba		
1	36658	02.03.2006	rba		
VERS.	CHANGE NUMBER	DATE	NAME		

1:1

sheet11

(Created by BOM number: A5B00900212937-37770)

Propietary data, Company confidential.
all rights reserved

Als Betriebsgeheimnis anvertraut
alle Rechte vorbehalten

FLASH_SDRAM

1200-1299

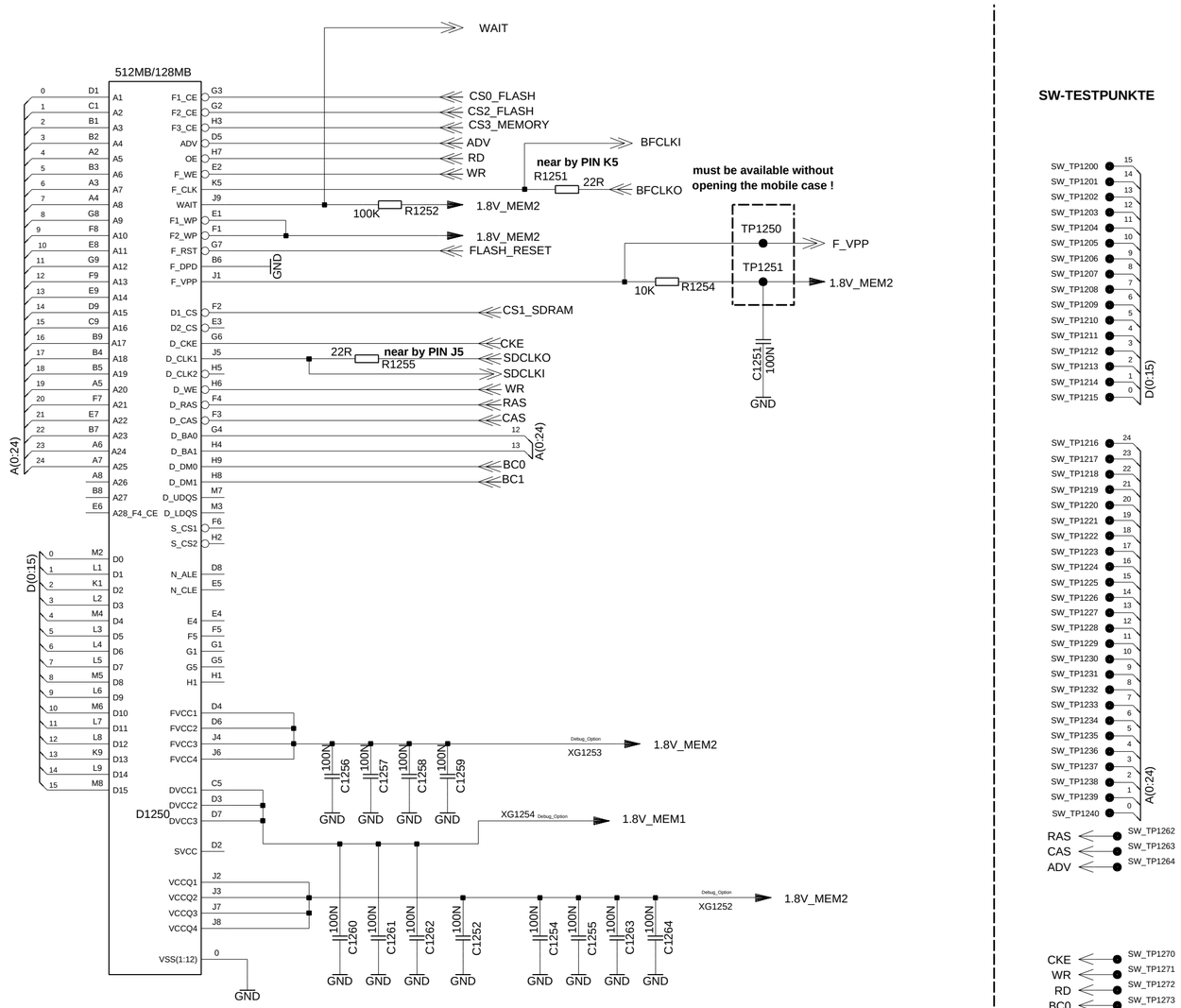

SW-TESTPUNKTE

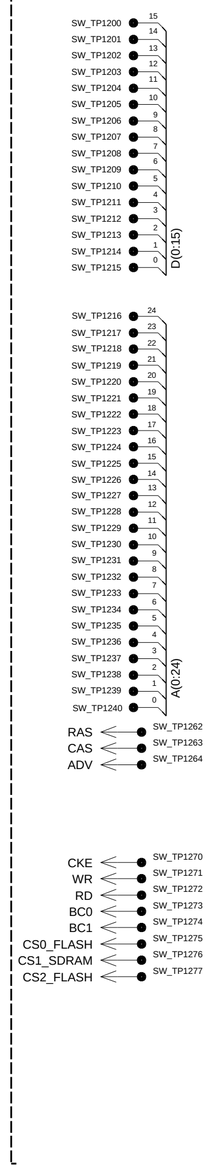

Layout Information:

1) place a capacitor (decoupling) to every power ball (VCC, VCCQ) as close as possible. There should be one capacitor for each ball.

2) connect the power plane as short as possible via the decoupling capacitor to the power ball.

3) connect ground as close as possible to the decoupling capcitor.

4) Please avoid branches by routing signals to more than one target (ball), this means for every signal expecting the power connectivity's. This is very important for the clock signals.

5) The BFCLKO & BFCLKI signal is a loop line from SGOLD2 to the Memory and back to SGOLD2. So avoid branches here as well. The same applies to SDCLKO & SDCLKI.

				DATE	17.10.2005	Philippe Variante 1 TOP HIERARCHY LEVEL SCHEMATIC	1:1
				USER	Bak		
				APPR'D			
				MP PD HW 4 AAL			
3	37770	27.03.2006	rba	BENQ mobile		261945	sheet12
2	37587	21.03.2006	rba				
1	36658	02.03.2006	rba				
VERS.	CHANGE NUMBER	DATE	NAME	(Created by BOM number: A5B00900212937-37770)			

MOZART

1300-1399

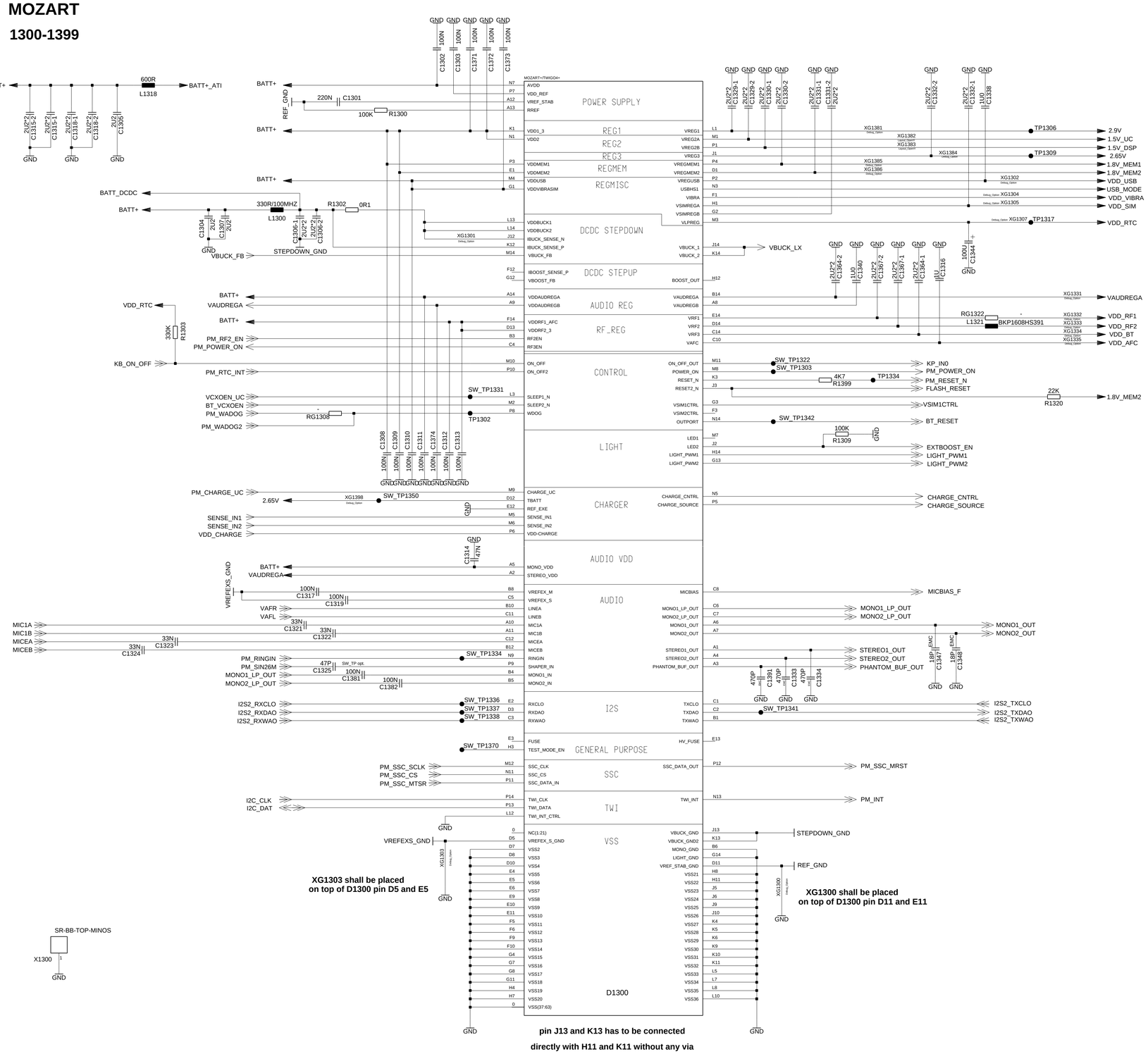

XG1303 shall be placed on top of D1300 pin D5 and E5

XG1300 shall be placed on top of D1300 pin D11 and E11

pin J13 and K13 has to be connected directly with H11 and K11 without any via

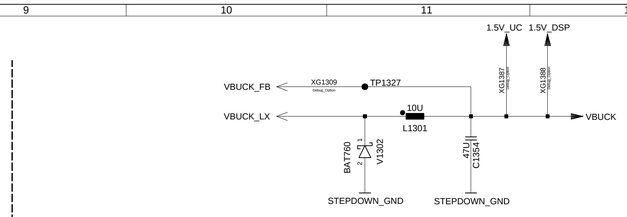

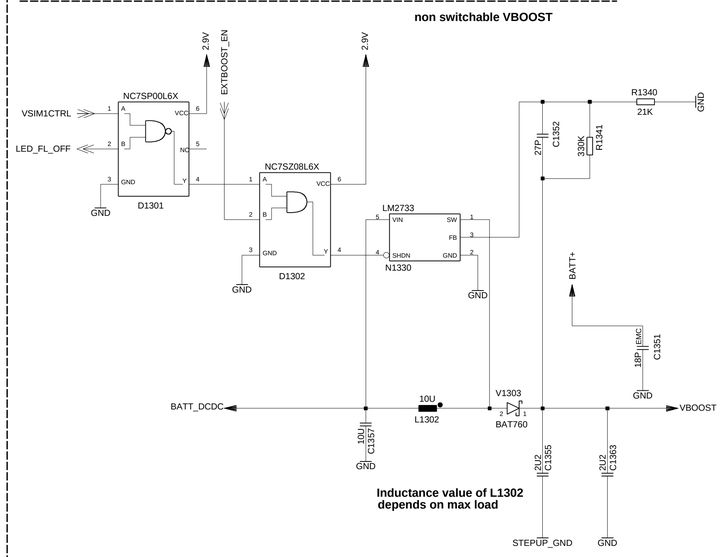

Inductance value of L1302 depends on max load

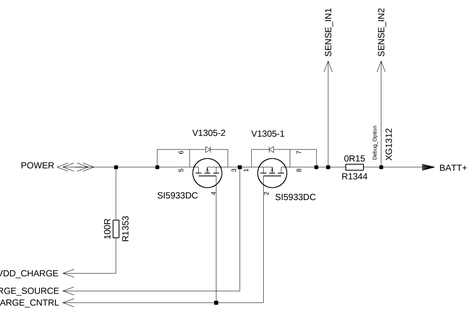

SR-BB-TOP-MINOS

X1300

short as possible at the ASIC

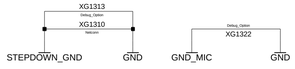

place directly at N1330-2

Sin nuestra expresa autorizacion, queda terminantemente prohibida la reproduccion total o parcial de este documento, asi como su uso indebido yo su exhibicion o comunication terceros. De los infractores se hara responsable el correspondiente resarcimiento de perjuicios. Se reserva todos los derechos para el caso de la concesion de patente de invencion o el registro de Modelo Industrial.

Copying of this document, and giving it to others and the use or communication of the contents thereof, are forbidden without express authority. Offenders are liable to the payment of damages. All rights are reserved in the event of the grant of a Patent or the registration of a utility model or Design.

Weitergabe sowie Vervielfaeltigung dieser Unterlage, Verwertung und Mitteilung ihres Inhalts nicht gestattet, soweit nicht ausdrueklich zugestanden. Zuwiderhandlungen Verpflichten zu Schadensersatz. Alle Rechte fuer den Fall der Patenterteilung oder GM-Eintragung vorbehalten

VERS.	CHANGE NUMBER	DATE	NAME		
3	37770	27.03.2006	rba	DATE 17.10.2005	Philippe
2	37587	21.03.2006	rba	USER Bak	Variante 1
1	36658	02.03.2006	rba	APPR'D	TOP HIERARCHY LEVEL
				MP PD HW 4 AAL	SCHEMATIC
				BENQ mobile	261945

1:1

sheet13

(Created by BOM number: A5B00900212937-37770)

Proprietary data, company confidential.
All rights reserved

Als Betriebsgeheimnis anvertraut
Alle Rechte vorbehalten

BATTERY_CONNECTOR

1400-1449

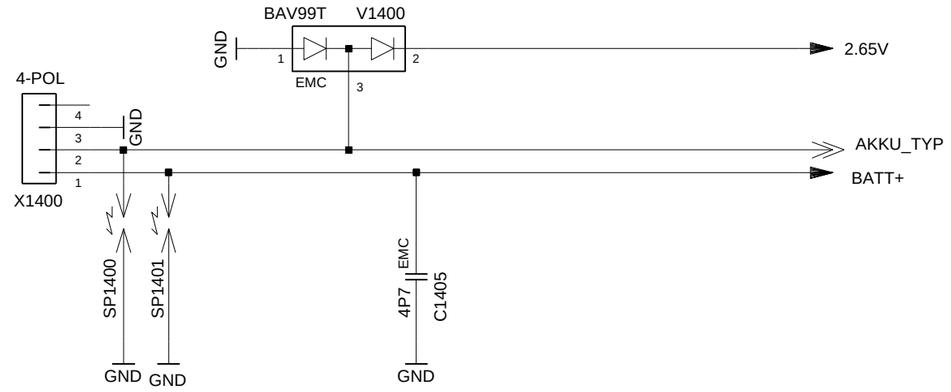

				DATE	17.10.2005	Philippe Variante 1 TOP HIERARCHY LEVEL SCHEMATIC	1:1
				USER	Bak		
				APPR'D			
				MP PD HW 4 AAL			
3	37770	27.03.2006	rba	BENQ mobile		261945	sheet14
2	37587	21.03.2006	rba				
1	36658	02.03.2006	rba				
VERS.	CHANGE NUMBER	DATE	NAME	(Created by BOM number: A5B00900212937-37770)			

Propietary data, Company confidential.
all rights reserved

Als Betriebsgeheimnis anvertraut
alle Rechte vorbehalten

IO_CONNECTOR

1500-1599

Attention: * means only graphical symbol

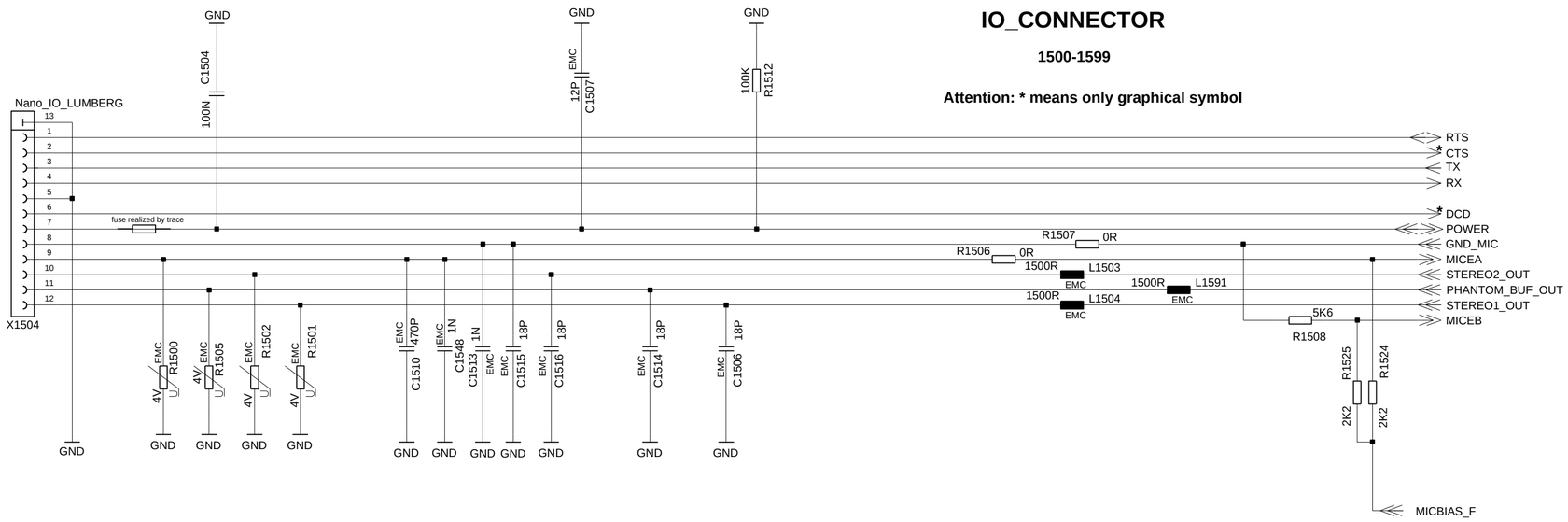

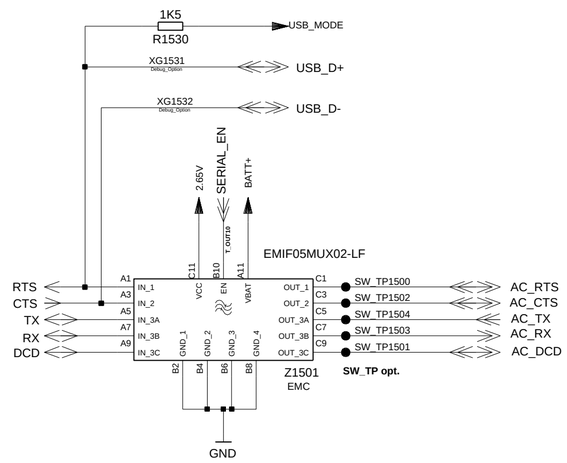

IO_CONNECTOR

				DATE	17.10.2005	Philippe Variante 1 TOP HIERARCHY LEVEL SCHEMATIC	1:1
				USER	Bak		
				APPR'D			
				MP PD HW 4 AAL			
3	37770	27.03.2006	rba	BENQ mobile		261945	sheet15
2	37587	21.03.2006	rba				
1	36658	02.03.2006	rba				
VERS.	CHANGE NUMBER	DATE	NAME	(Created by BOM number: A5B00900212937-37770)			

SIM_CONNECTOR

1600-1659

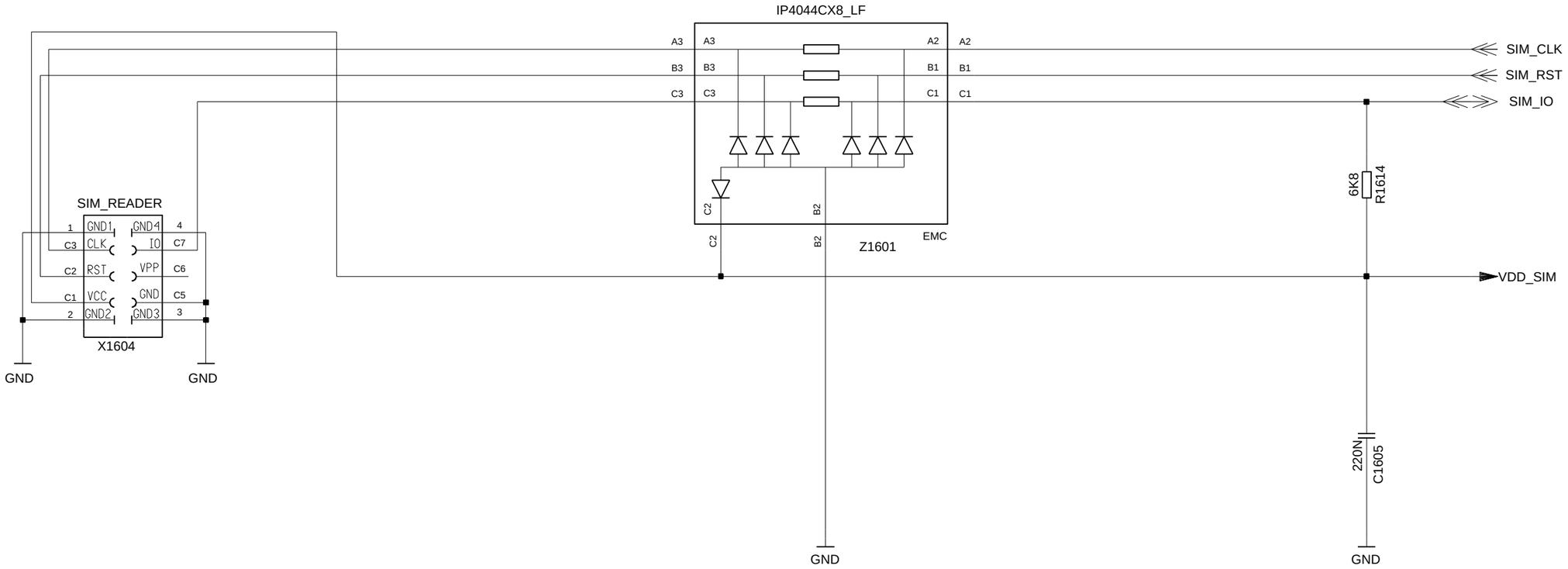

				DATE	17.10.2005	Philippe Variante 1 TOP HIERARCHY LEVEL SCHEMATIC	1:1
				USER	Bak		
				APPR'D			
				MP PD HW 4 AAL			
3	37770	27.03.2006	rba	BENQ mobile		261945	sheet16
2	37587	21.03.2006	rba				
1	36658	02.03.2006	rba				
VERS.	CHANGE NUMBER	DATE	NAME	(Created by BOM number: A5B00900212937-37770)			

Proprietary data, company confidential.
All rights reserved

Als Betriebsgeheimnis anvertraut
Alle Rechte vorbehalten

Proprietary data, company confidential.
All rights reserved

Als Betriebsgeheimnis anvertraut
Alle Rechte vorbehalten

SPEAKER_SOLUTION_1

1700-1759

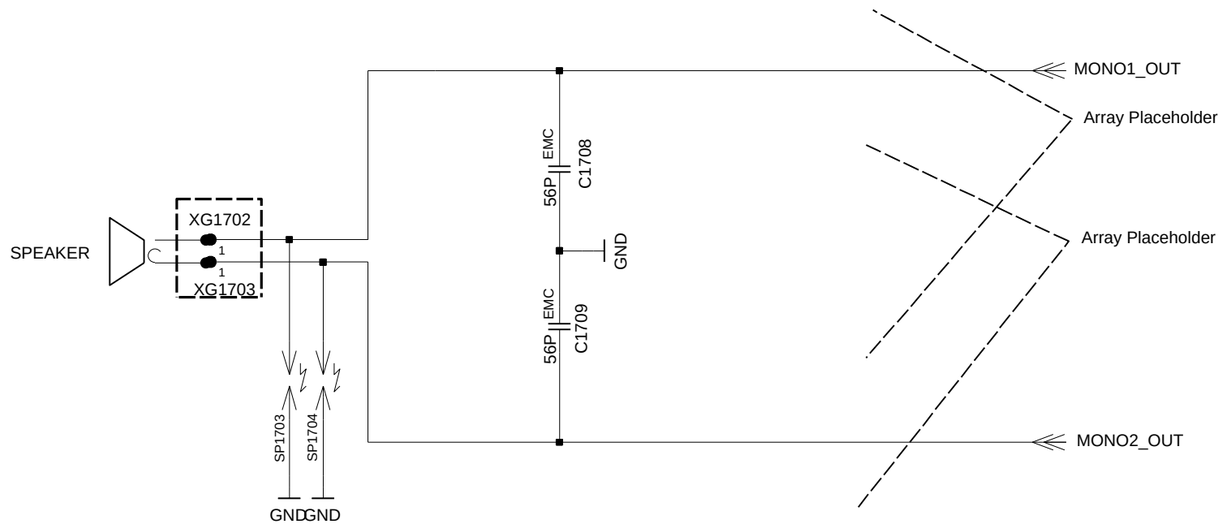

				DATE	17.10.2005	Philippe Variante 1 TOP HIERARCHY LEVEL SCHEMATIC	1:1
				USER	Bak		
				APPR'D			
				MP PD HW 4 AAL			
3	37770	27.03.2006	rba	BENQ mobile		261945	sheet17
2	37587	21.03.2006	rba				
1	36658	02.03.2006	rba				
VERS.	CHANGE NUMBER	DATE	NAME	(Created by BOM number: A5B00900212937-37770)			

Proprietary data, company confidential.
All rights reserved

Als Betriebsgeheimnis anvertraut
Alle Rechte vorbehalten

MICROPHONE_CIRCUIT_1

1900-1999

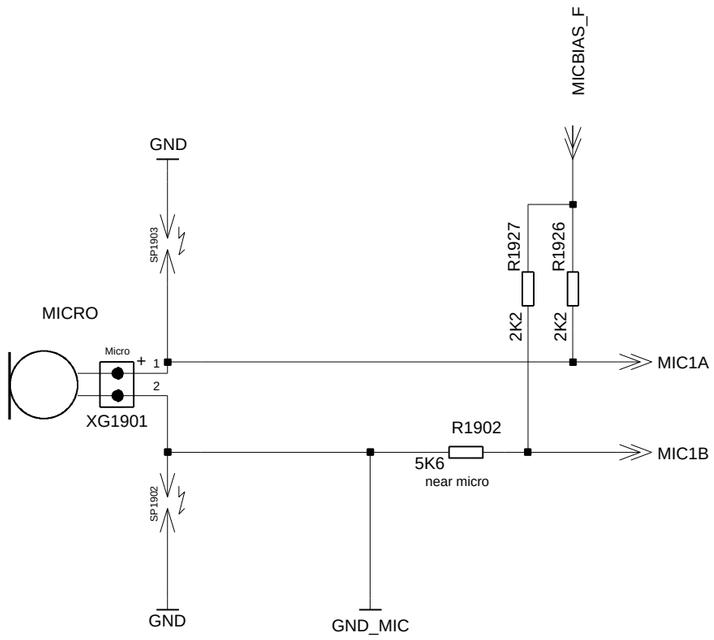

				DATE	17.10.2005	Philippe Variante 1 TOP HIERARCHY LEVEL SCHEMATIC	1:1
				USER	Bak		
				APPR'D			
				MP PD HW 4 AAL			
3	37770	27.03.2006	rba	BENQ mobile		261945	sheet19
2	37587	21.03.2006	rba				
1	36658	02.03.2006	rba				
VERS.	CHANGE NUMBER	DATE	NAME	(Created by BOM number: A5B00900212937-37770)			

Proprietary data, company confidential.
All rights reserved

Als Betriebsgeheimnis anvertraut
Alle Rechte vorbehalten

VIBRA

2100-2125

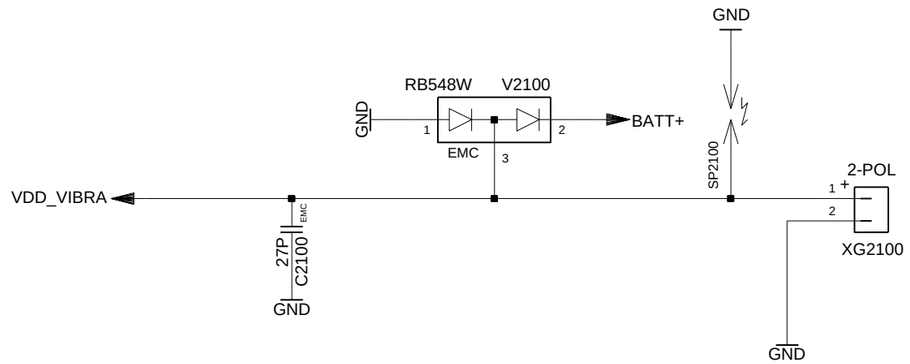

				DATE	17.10.2005	Philippe Variante 1 TOP HIERARCHY LEVEL SCHEMATIC	1:1
				USER	Bak		
				APPR'D			
				MP PD HW 4 AAL			
3	37770	27.03.2006	rba	BENQ mobile		261945	sheet21
2	37587	21.03.2006	rba				
1	36658	02.03.2006	rba				
VERS.	CHANGE NUMBER	DATE	NAME	(Created by BOM number: A5B00900212937-37770)			

Propietary data, Company confidential.
all rights reserved

Als Betriebsgeheimnis anvertraut
alle Rechte vorbehalten

DISPLAY_CONNECTOR

2200-2299

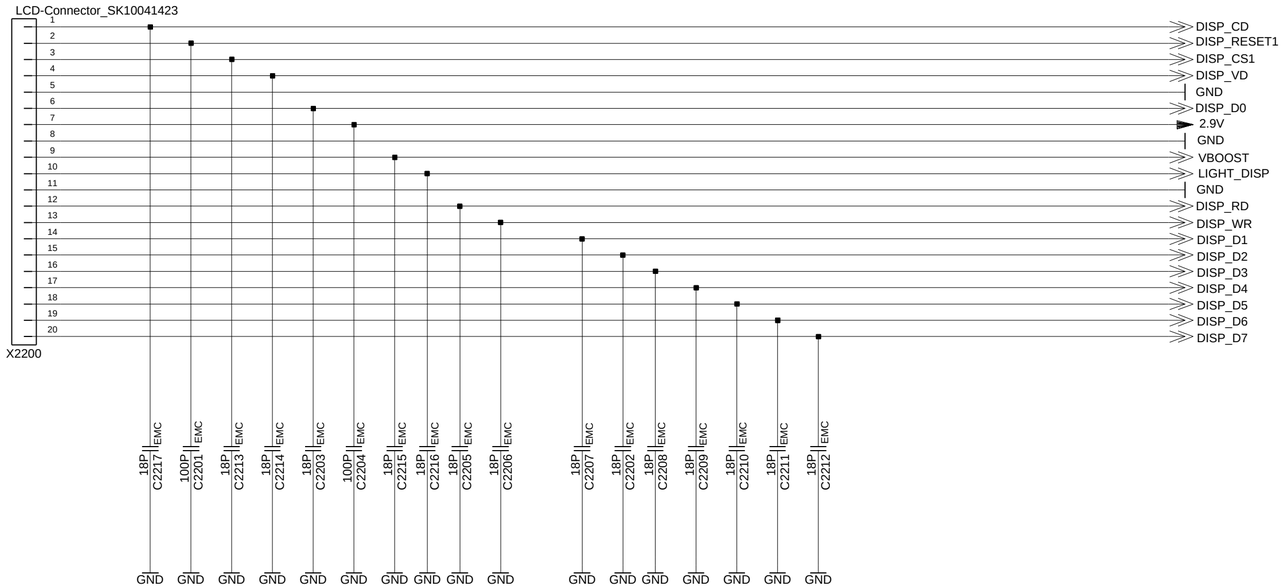

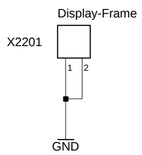

				DATE	17.10.2005	Philippe Variante 1 TOP HIERARCHY LEVEL SCHEMATIC	1:1
				USER	Bak		
				APPR'D			
				MP PD HW 4 AAL			
3	37770	27.03.2006	rba	BENQ mobile		261945	sheet22
2	37587	21.03.2006	rba				
1	36658	02.03.2006	rba				
VERS.	CHANGE NUMBER	DATE	NAME	(Created by BOM number: A5B00900212937-37770)			

DISPLAY/ KEYPAD BACKLIGHT CONTROL

2300-2399

MAIN_DISPLAY

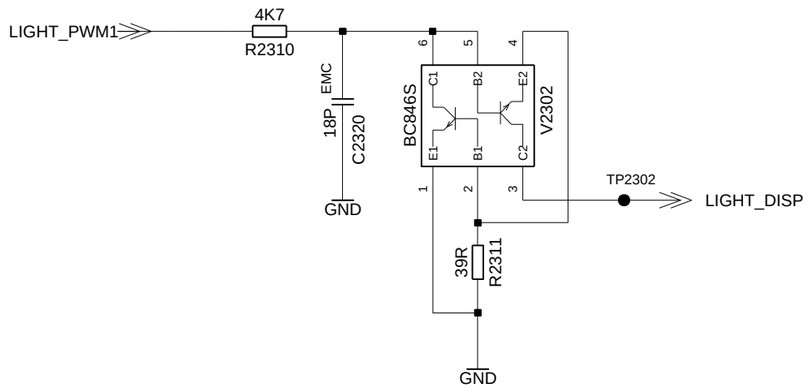

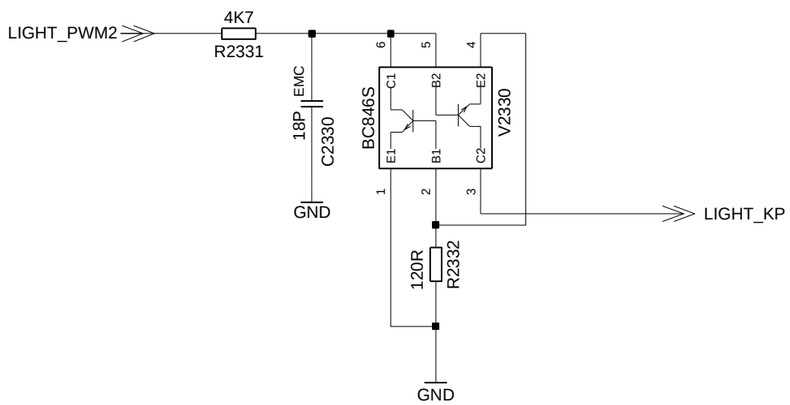

Proprietary data, company confidential.
All rights reserved

Als Betriebsgeheimnis anvertraut
Alle Rechte vorbehalten

				DATE	17.10.2005	Philippe Variante 1 TOP HIERARCHY LEVEL SCHEMATIC	1:1
				USER	Bak		
				APPR'D			
				MP PD HW 4 AAL			
3	37770	27.03.2006	rba	BENQ mobile		261945	sheet23
2	37587	21.03.2006	rba				
1	36658	02.03.2006	rba				
VERS.	CHANGE NUMBER	DATE	NAME	(Created by BOM number: A5B00900212937-37770)			

Proprietary data, company confidential.
All rights reserved

Als Betriebsgeheimnis anvertraut
Alle Rechte vorbehalten

MMI_CONNECTOR

BOARD TO BOARD CONNECTOR

2700-2749

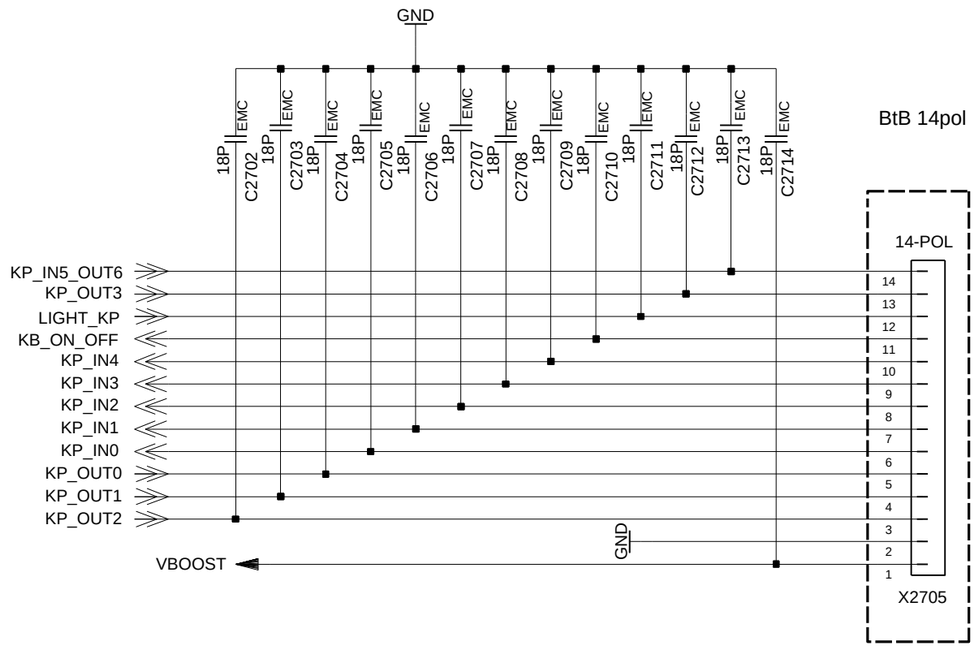

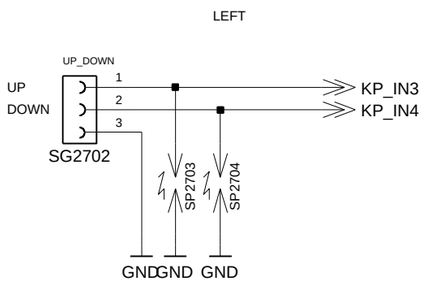

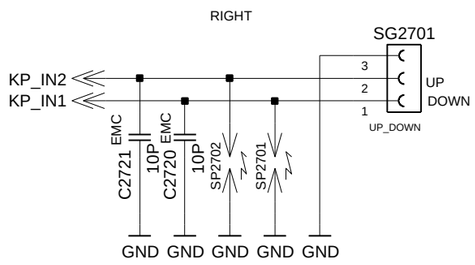

				DATE	17.10.2005	Philippe Variante 1 TOP HIERARCHY LEVEL SCHEMATIC	1:1
				USER	Bak		
				APPR'D			
				MP PD HW 4 AAL			
3	37770	27.03.2006	rba	BENQ mobile		261945	sheet27
2	37587	21.03.2006	rba				
1	36658	02.03.2006	rba				
VERS.	CHANGE NUMBER	DATE	NAME	(Created by BOM number: A5B00900212937-37770)			

Camera Interface

3500-3599

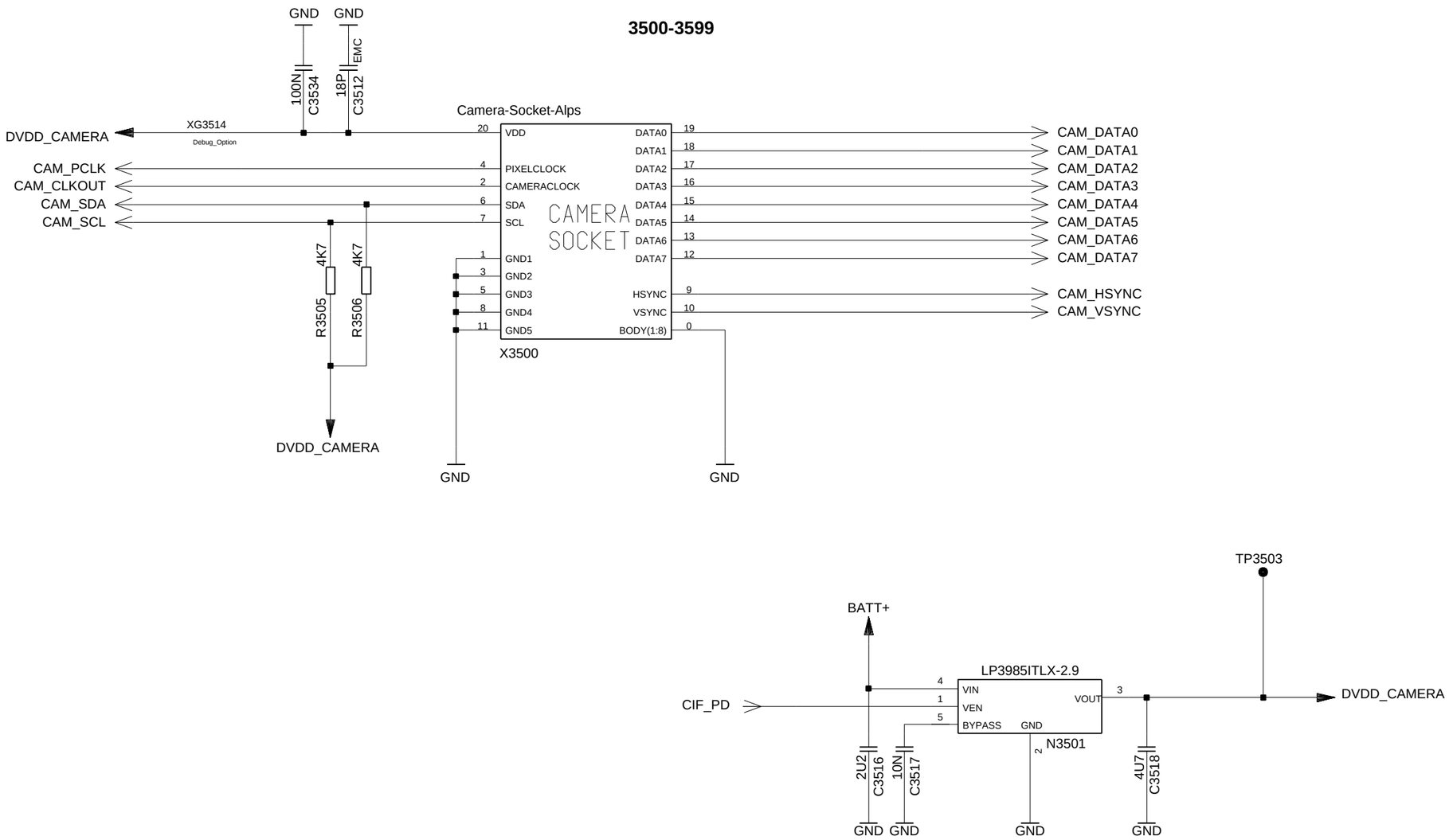

				DATE	17.10.2005	Philippe Variante 1 TOP HIERARCHY LEVEL SCHEMATIC	1:1
				USER	Bak		
				APPR'D			
				MP PD HW 4 AAL			
3	37770	27.03.2006	rba	BENQ mobile		261945	sheet35
2	37587	21.03.2006	rba				
1	36658	02.03.2006	rba				
VERS.	CHANGE NUMBER	DATE	NAME	(Created by BOM number: A5B00900212937-37770)			

Proprietary data, company confidential.
All rights reserved

Als Betriebsgeheimnis anvertraut
Alle Rechte vorbehalten

Propietary data, Company confidential.
all rights reserved

ANTENNA_CIRCUIT with small PA

3800-3849

ANT

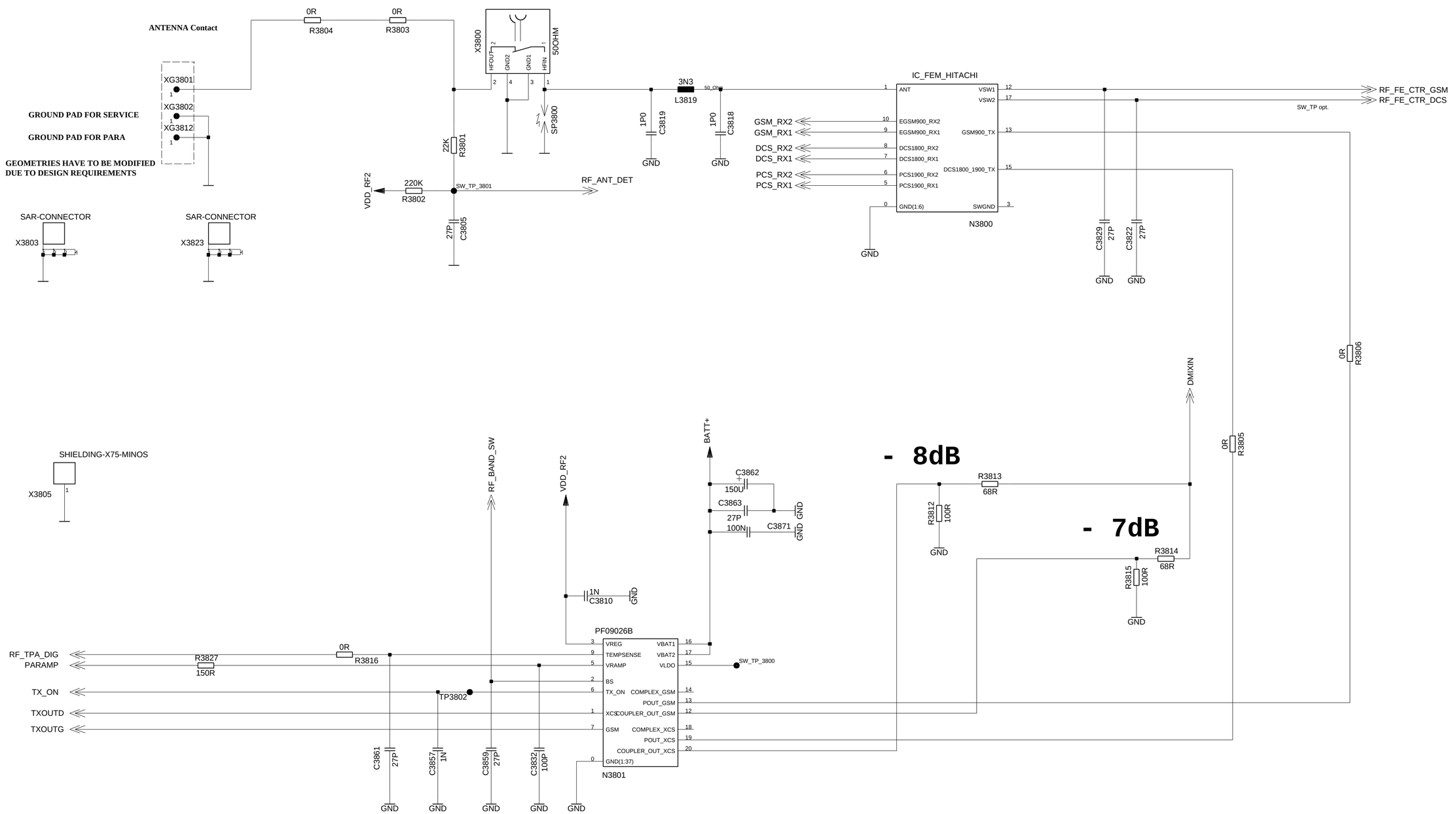

				DATE	17.10.2005	Philippe Variante 1 TOP HIERARCHY LEVEL SCHEMATIC
				USER	Bak	1:1
				APPR'D		
				MP PD HW 4 AAL		
3	37770	27.03.2006	rba	BENQ mobile		261945
2	37587	21.03.2006	rba			sheet38
1	36658	02.03.2006	rba			
VERS.	CHANGE NUMBER	DATE	NAME	(Created by BOM number: A5B00900212937-37770)		

Als Betriebsgeheimnis anvertraut
alle Rechte vorbehalten

Propietary data, Company confidential.
all rights reserved

Als Betriebsgeheimnis anvertraut
alle Rechte vorbehalten

RF_HITACHI_BRIGHT

3900-3999

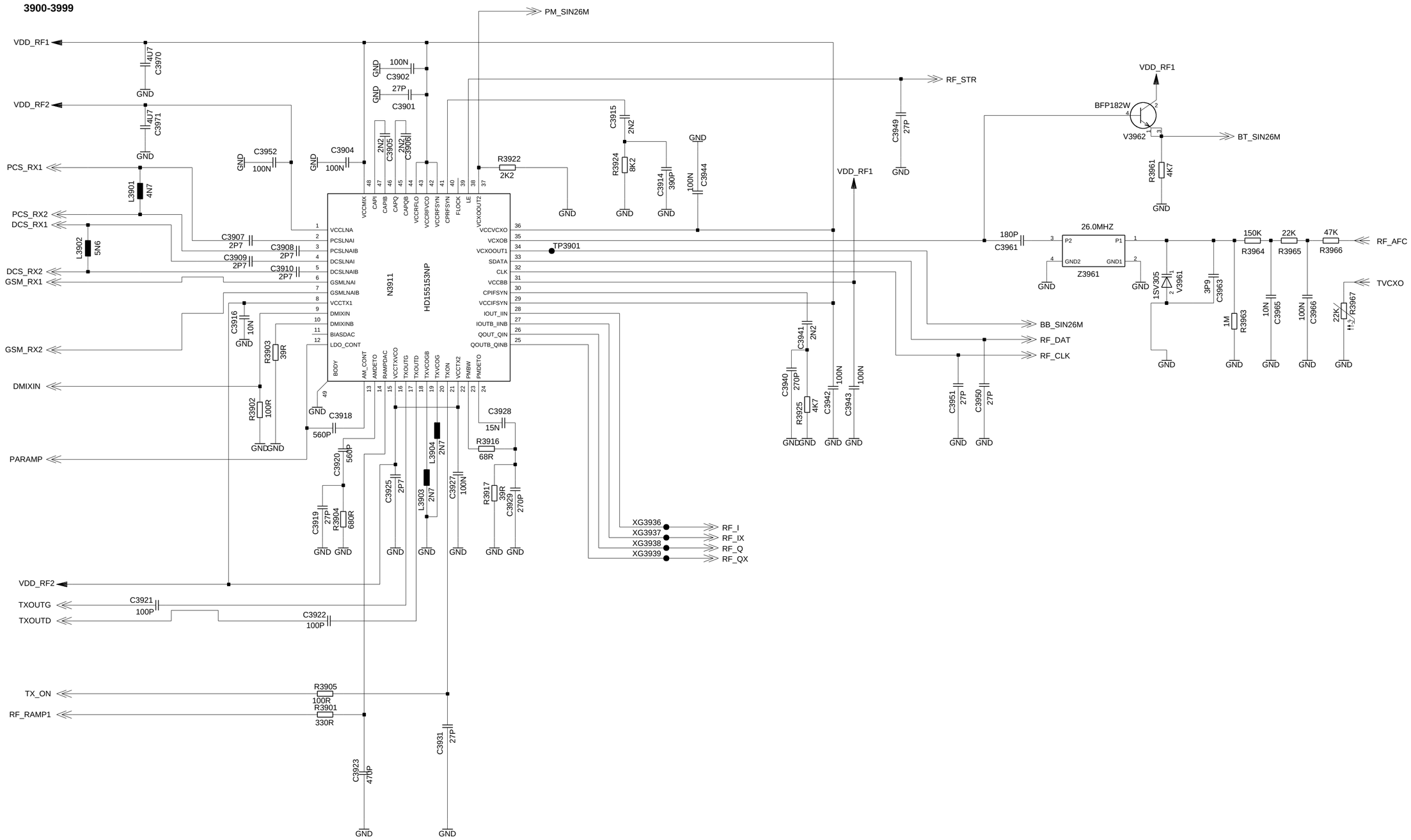

				DATE	17.10.2005	Philippe Variante 1 TOP HIERARCHY LEVEL SCHEMATIC
				USER	Bak	1:1
				APPR'D		
				MP PD HW 4 AAL		
3	37770	27.03.2006	rba	BENQ mobile		261945
2	37587	21.03.2006	rba			sheet39
1	36658	02.03.2006	rba			
VERS.	CHANGE NUMBER	DATE	NAME	(Created by BOM number: A5B00900212937-37770)		

MMC READER

4800-4899

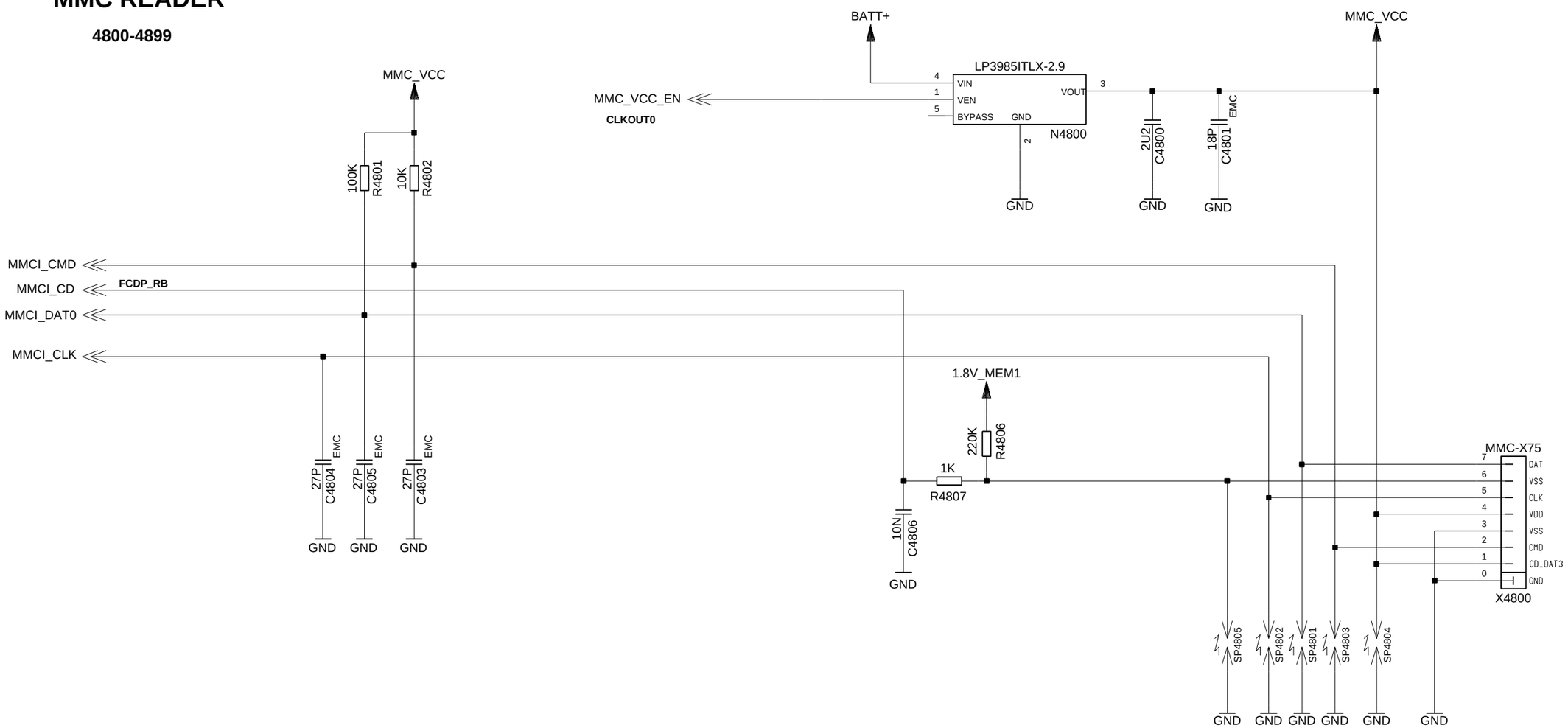

				DATE	17.10.2005
				USER	Bak
				APPR'D	
				MP PD HW 4 AAL	
3	37770	27.03.2006	rba	BENQ mobile	
2	37587	21.03.2006	rba		
1	36658	02.03.2006	rba		
VERS.	CHANGE NUMBER	DATE	NAME		

Philippe
Variante 1
TOP HIERARCHY LEVEL
SCHEMATIC

1:1

261945

sheet48

(Created by BOM number: A5B00900212937-37770)

Proprietary data, company confidential.
All rights reserved

Als Betriebsgeheimnis anvertraut
Alle Rechte vorbehalten

Proprietary data, company confidential.
All rights reserved

Als Betriebsgeheimnis anvertraut
Alle Rechte vorbehalten

LED FLASHLIGHT

4900-4999

Only for Hawk

T_OUT0

TP4900

DSPIN1

				DATE	17.10.2005	Philippe Variante 1 TOP HIERARCHY LEVEL SCHEMATIC	1:1
				USER	Bak		
				APPR'D			
				MP PD HW 4 AAL			
3	37770	27.03.2006	rba	BENQ mobile		261945	sheet49
2	37587	21.03.2006	rba				
1	36658	02.03.2006	rba				
VERS.	CHANGE NUMBER	DATE	NAME	(Created by BOM number: A5B00900212937-37770)			

Proprietary data, company confidential.
All rights reserved

Als Betriebsgeheimnis anvertraut
Alle Rechte vorbehalten

BLUETOOTH Solution 2

5100-5199

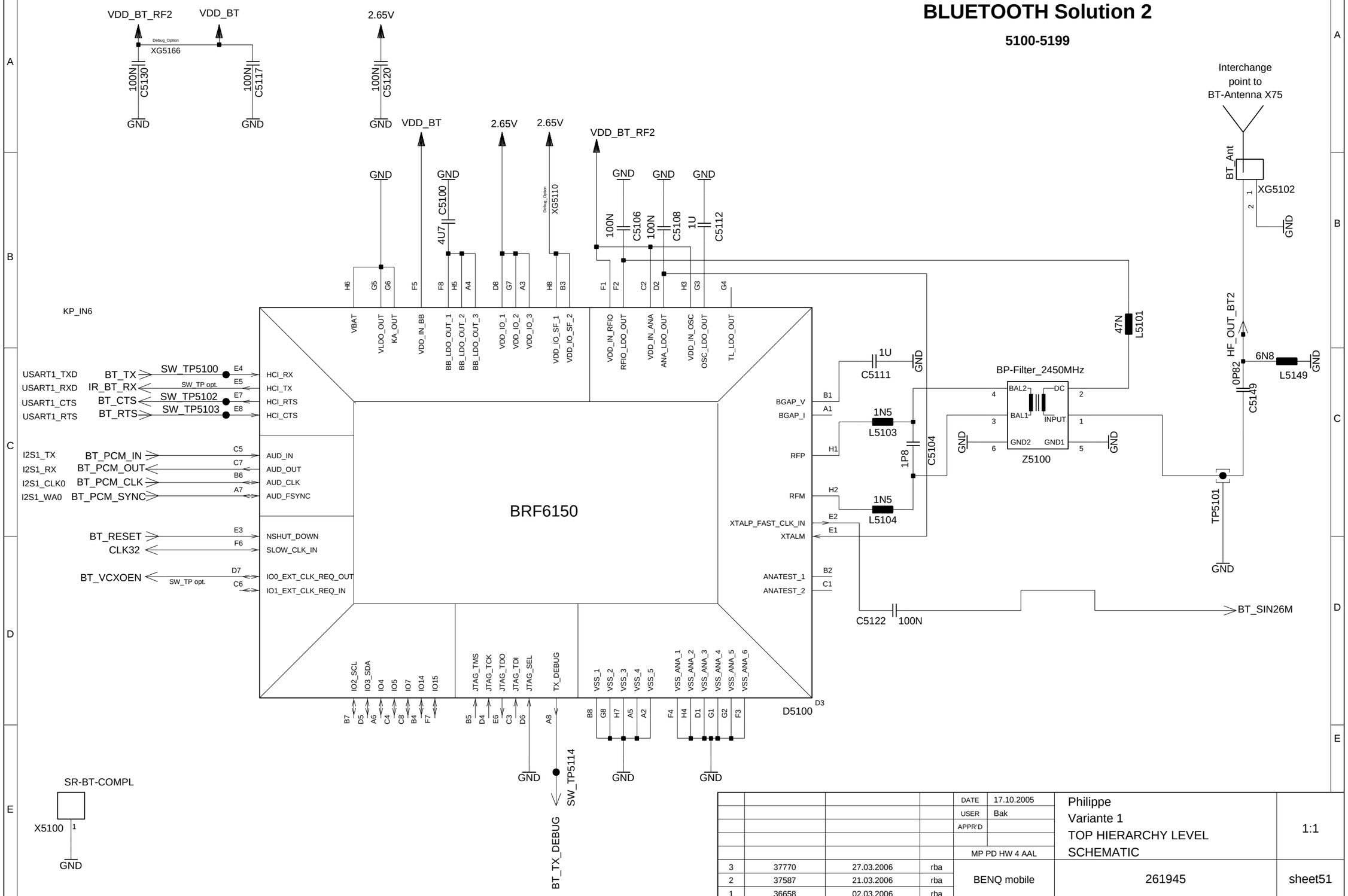

				DATE	17.10.2005
				USER	Bak
				APPR'D	
				MP PD HW 4 AAL	
3	37770	27.03.2006	rba	BENQ mobile	
2	37587	21.03.2006	rba		
1	36658	02.03.2006	rba		
VERS.	CHANGE NUMBER	DATE	NAME		

Philippe
Variante 1
TOP HIERARCHY LEVEL
SCHEMATIC

1:1

261945

sheet51

(Created by BOM number: A5B00900212937-37770)

Propietary data, Company confidential.
all rights reserved

Als Betriebsgeheimnis anvertraut
alle Rechte vorbehalten

Audio Video Interface

5400-5499

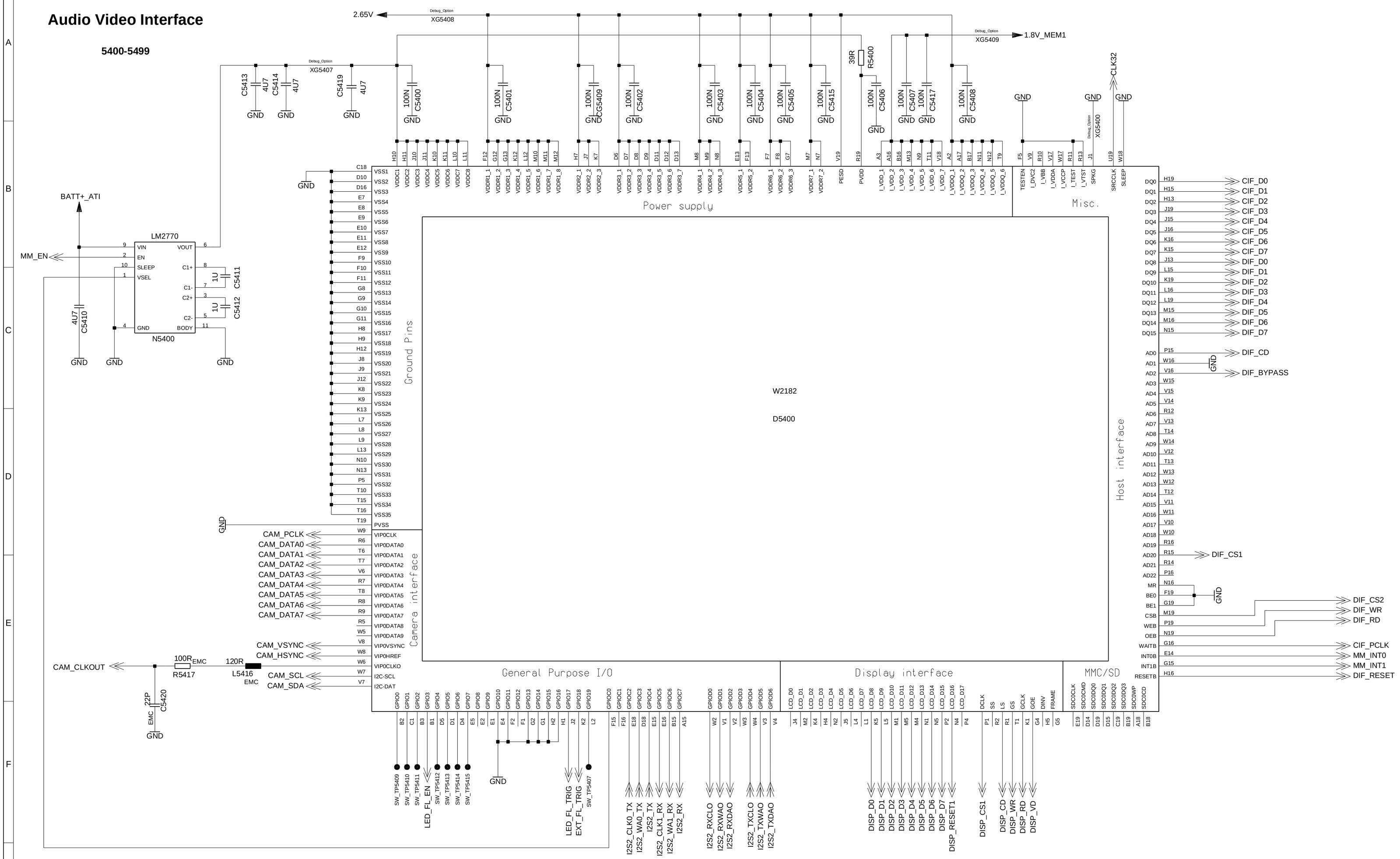

				DATE	17.10.2005	Philippe Variante 1 TOP HIERARCHY LEVEL SCHEMATIC	1:1
				USER	Bak		
				APPR'D			
				MP PD HW 4 AAL			
3	37770	27.03.2006	rba	BENQ mobile		261945	sheet54
2	37587	21.03.2006	rba				
1	36658	02.03.2006	rba				
VERS.	CHANGE NUMBER	DATE	NAME	(Created by BOM number: A5B00900212937-37770)			

PROPRIETARY DATA, COMPANY CONFIDENTIAL
ALL RIGHTS RESERVED

ALS BETRIEBSGEHEIMNIS ANVERTRAUT
ALLE RECHTE VORBEHALTEN

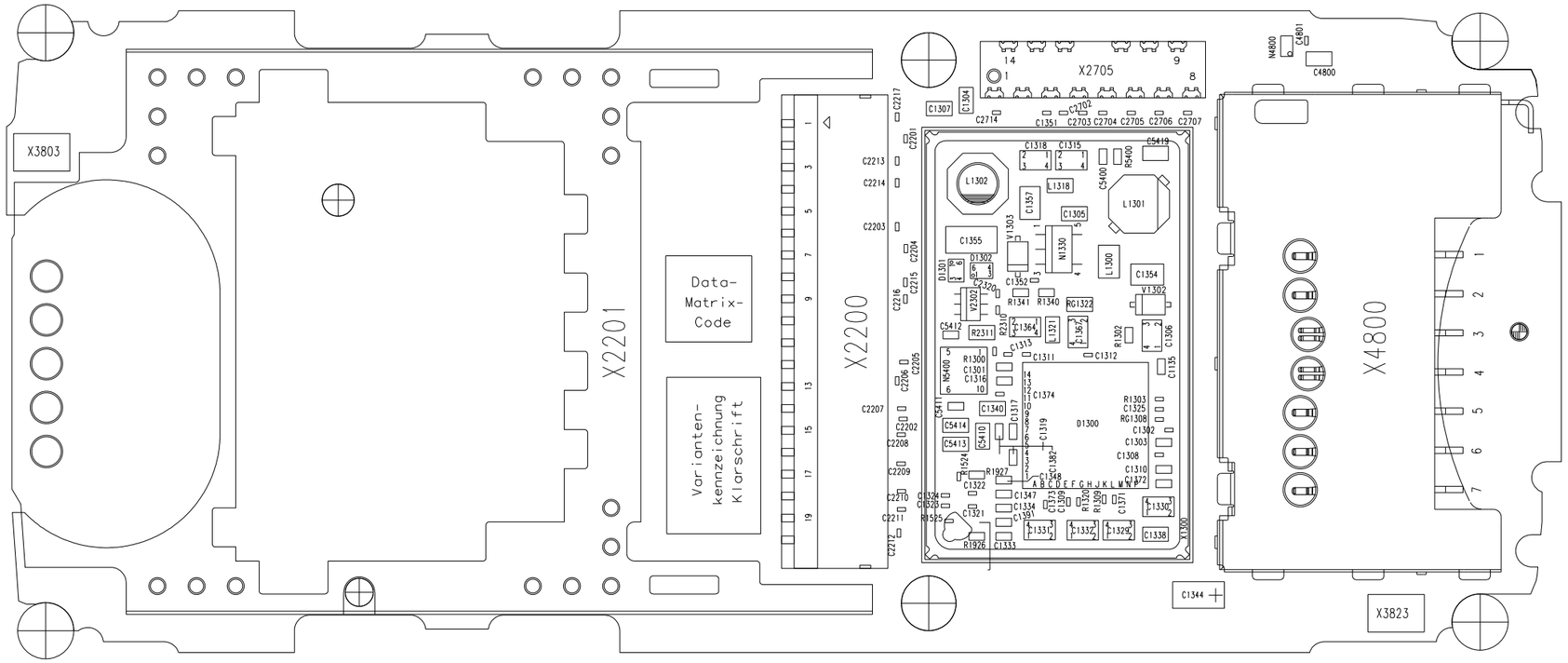

C1135	7B	C1374	6B	N1330	6A
C1301	6B	C1382	6B	N4800	8A
C1302	7B	C1391	6B	N5400	6B
C1303	7B	C2201	6A	R1300	6B
C1304	6A	C2202	6B	R1302	7B
C1305	6A	C2203	6A	R1303	7B
C1306	7B	C2204	6B	R1309	7B
C1307	6A	C2205	6B	R1320	7B
C1308	7B	C2206	6B	R1340	6B
C1309	7B	C2207	6B	R1341	6B
C1310	7B	C2208	6B	R1524	6B
C1311	6B	C2209	6B	R1525	6B
C1312	7B	C2210	6B	R1926	6C
C1313	6B	C2211	6B	R1927	6B
C1315	7A	C2212	6C	R2310	6B
C1316	6B	C2213	6A	R2311	6B
C1317	6B	C2214	6A	R5400	7A
C1318	6A	C2215	6B	V1302	7B
C1319	6B	C2216	6B	V1303	6B
C1321	6B	C2217	6A	V2302	6B
C1322	6B	C2320	6B	X1300	7C
C1323	6B	C2702	6A	X2200	5C
C1324	6B	C2703	7A	X2201	4B
C1325	7B	C2704	7A	X2705	6A
C1329	7C	C2705	7A	X3803	1A
C1330	7B	C2706	7A	X3823	8C
C1331	6C	C2707	7A	X4800	8B
C1332	7C	C2714	6A		
C1333	6C	C4800	8A		
C1334	6B	C4801	8A		
C1338	7B	C5400	7A		
C1340	6B	C5410	6B		
C1344	7C	C5411	6B		
C1347	6B	C5412	6B		
C1348	6B	C5413	6B		
C1351	6A	C5414	6B		
C1352	6B	C5419	7A		
C1354	7B	D1300	6B		
C1355	6A	D1301	6B		
C1357	6A	D1302	6B		
C1364	6B	L1300	7B		
C1367	7B	L1301	7A		
C1371	7B	L1302	6A		
C1372	7B	L1318	7A		
C1373	6B	L1321	6B		

Achtung : Hoehenprofil C24___-___-___-__-42 (gilt nur fuer Entwicklung)
Liefervarianten siehe : V24851-Z2000-A1-*-35

				DATE	17.10.2005	Philippe Variante 1 WIRING DIAGRAMM (SOLDER SIDE 1)	3:1
				NAME	Bak		
				APPR'D			
				STD			
				MP PD HW 4 AAL			
3	37770	27.03.2006	rba	BENQ mobile		261946	SHEET 1+
2	37587	21.03.2006	rba				
1	36658	02.03.2006	rba				
VERS.	CHANGE NUMBER	DATE	NAME	(Created by BOM number: A5B00900212937-37770)			

PROPRIETARY DATA, COMPANY CONFIDENTIAL
ALL RIGHTS RESERVED

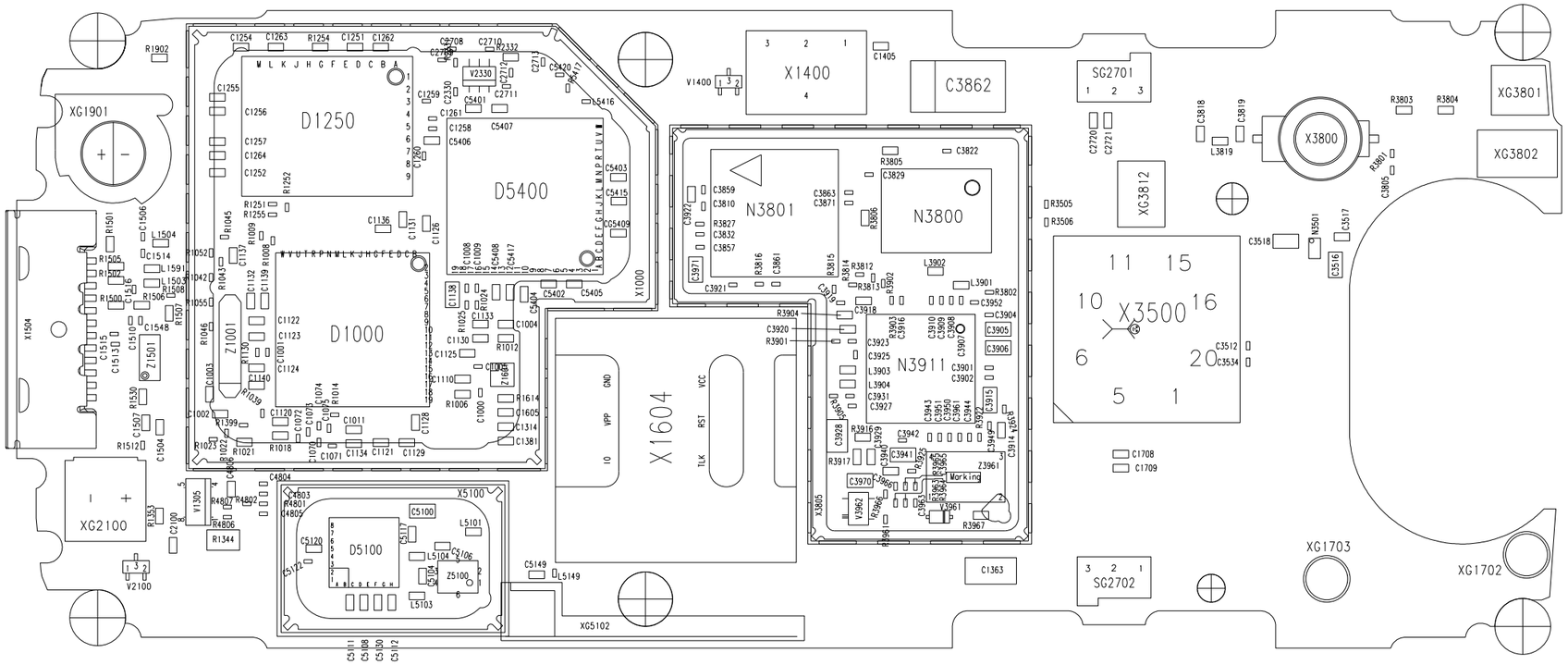

C1000	4B	C1261	4A	C3861	6B	C4805	3B	N3911	7B	R3803	9A	X5100	3C
C1001	3B	C1262	4A	C3862	6A	C4806	3B	R1006	4B	R3804	9A	Z1001	3B
C1002	3B	C1263	3A	C3863	6A	C5100	4B	R1008	3B	R3805	6A	Z1501	3B
C1003	3B	C1264	3A	C3871	6A	C5104	4C	R1009	3A	R3806	6A	Z1601	4B
C1004	4B	C1314	4B	C3901	7B	C5106	4C	R1012	4B	R3812	6B	Z3961	7B
C1005	4B	C1363	7C	C3902	7B	C5108	4C	R1014	4B	R3813	6B	Z5100	4C
C1008	4B	C1381	4B	C3904	7B	C5111	4C	R1018	3B	R3814	6B		
C1009	4B	C1405	6A	C3905	7B	C5112	4C	R1021	3B	R3815	6B		
C1011	4B	C1504	3B	C3906	7B	C5117	4C	R1022	3B	R3816	6B		
C1070	3B	C1506	3A	C3907	7B	C5120	3C	R1023	3B	R3827	5A		
C1071	4B	C1507	3B	C3908	7B	C5122	3C	R1024	4B	R3901	6B		
C1072	3B	C1510	3B	C3909	7B	C5130	4C	R1025	4B	R3902	6B		
C1073	3B	C1513	2B	C3910	7B	C5149	5C	R1039	3B	R3903	6B		
C1074	3B	C1514	3B	C3914	7B	C5401	4A	R1042	3B	R3904	6B		
C1075	4B	C1515	2B	C3915	7B	C5402	5B	R1043	3B	R3905	6B		
C1110	4B	C1516	3B	C3916	6B	C5403	5A	R1045	3B	R3916	6B		
C1120	3B	C1548	3B	C3918	6B	C5404	5B	R1046	3B	R3917	6B		
C1121	4B	C1605	4B	C3919	6B	C5405	5B	R1052	3B	R3922	7B		
C1122	3B	C1708	8B	C3920	6B	C5406	4A	R1055	3B	R3924	7B		
C1123	3B	C1709	7B	C3921	6B	C5407	4A	R1130	3B	R3925	6B		
C1124	3B	C2100	3C	C3922	5A	C5408	4B	R1251	3A	R3961	6C		
C1125	4B	C2330	4A	C3923	6B	C5415	5A	R1252	3A	R3963	6B		
C1126	4A	C2708	4A	C3925	6B	C5417	4B	R1254	3A	R3964	6B		
C1128	4B	C2709	4A	C3927	6B	C5420	5A	R1255	3A	R3965	6B		
C1129	4B	C2710	4A	C3928	6B	D1000	4B	R1344	3C	R3966	6B		
C1130	4B	C2711	4A	C3929	6B	D1250	4A	R1353	3C	R3967	7B		
C1131	4A	C2712	4A	C3931	6B	D5100	4C	R1399	3B	R4801	3B		
C1132	3B	C2713	5A	C3940	6B	D5400	5B	R1500	2B	R4802	3B		
C1133	4B	C2720	7A	C3941	6B	L1503	3B	R1501	2B	R4806	3B		
C1134	4B	C2721	7A	C3942	6B	L1504	3B	R1502	2B	R4807	3B		
C1136	4A	C3512	8B	C3943	7B	L1591	3B	R1505	2B	R5417	5A		
C1137	3B	C3516	9B	C3944	7B	L3819	8A	R1506	3B	V1305	3B		
C1138	4B	C3517	9B	C3949	7B	L3901	7B	R1507	3B	V1400	5A		
C1139	3B	C3518	8B	C3950	7B	L3902	7B	R1508	3B	V2100	3C		
C1140	3B	C3534	8B	C3951	7B	L3903	6B	R1512	3B	V2330	4A		
C1251	4A	C3805	9A	C3952	7B	L3904	6B	R1530	3B	V3961	7B		
C1252	3A	C3810	5A	C3961	7B	L5101	4C	R1614	4B	V3962	6B		
C1254	3A	C3818	8A	C3963	6B	L5103	4C	R1902	3A	X1000	3A		
C1255	3A	C3819	8A	C3965	6B	L5104	4C	R2331	4A	X1400	6A		
C1256	3A	C3822	7A	C3966	6B	L5149	5C	R2332	4A	X1504	2B		
C1257	3A	C3829	6A	C3970	6B	L5416	5A	R3505	7A	X1604	6B		
C1258	4A	C3832	5B	C3971	5B	N3501	8B	R3506	7A	X3500	8B		
C1259	4A	C3857	5B	C4803	3B	N3800	7A	R3801	9A	X3800	8A		
C1260	4A	C3859	5A	C4804	3B	N3801	6A	R3802	7B	X3805	7C		

Achtung : Hoehenprofil C24___-___-___-__-42 (gilt nur fuer Entwicklung)
Liefervarianten siehe : V24851-Z2000-A1-*-35

				DATE	17.10.2005	Philippe Variante 1 WIRING DIAGRAMM (SOLDER SIDE 2)	3:1
				NAME	Bak		
				APPR'D			
				STD			
				MP PD HW 4 AAL			
3	37770	27.03.2006	rba	BENQ mobile		261946	SHEET 2+
2	37587	21.03.2006	rba				
1	36658	02.03.2006	rba				
VERS.	CHANGE NUMBER	DATE	NAME	(Created by BOM number: A5B00900212937-37770)			

ALS BETRIEBSGEHEIMNIS ANVERTRAUT
ALLE RECHTE VORBEHALTEN

PROPRIETARY DATA, COMPANY CONFIDENTIAL
ALL RIGHTS RESERVED

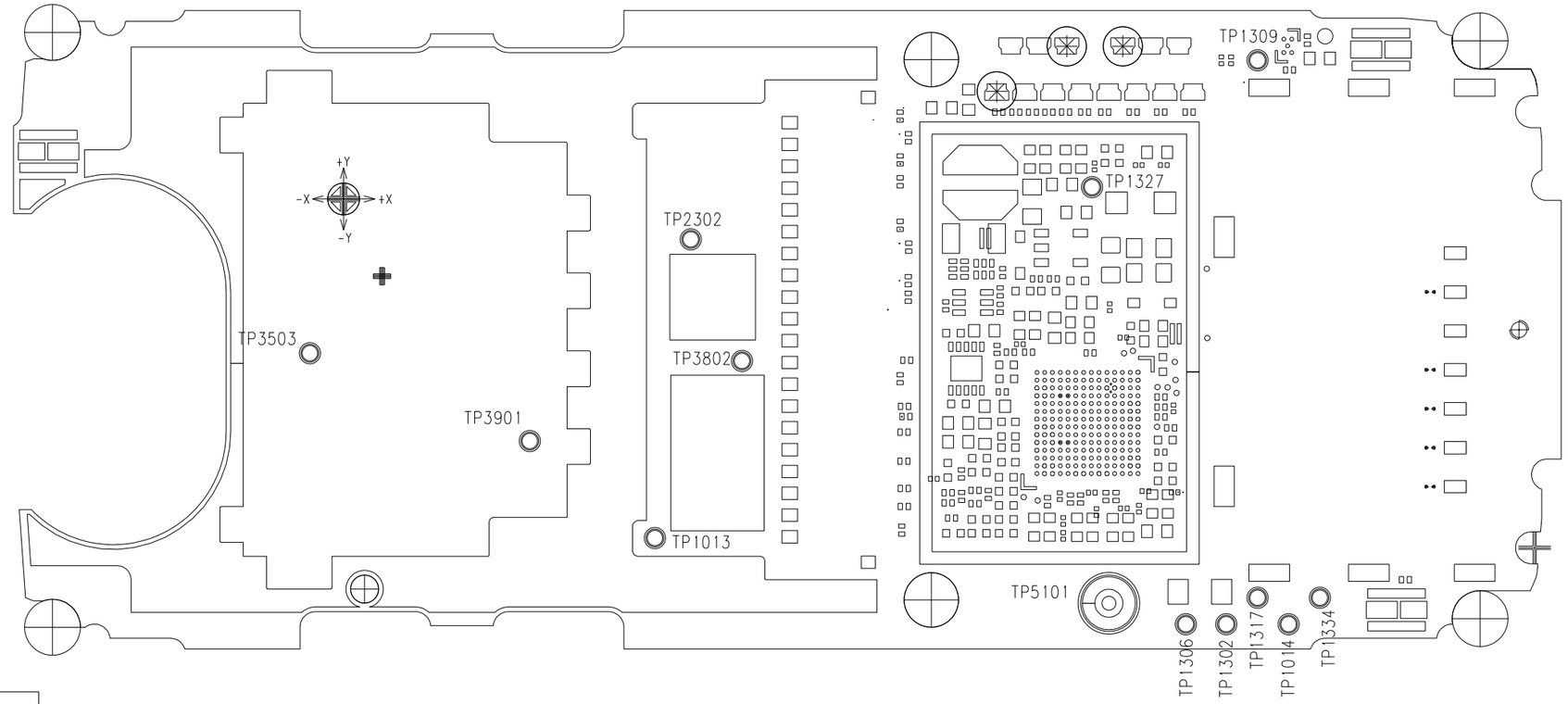

TP1013	5C	/TVCXO
TP1014	8C	/BREF
TP1302	7C	/PM_WADOG2
TP1306	7C	2.9V
TP1309	8A	2.65V
TP1317	8C	VDD_RTC
TP1327	7A	VBUCK
TP1334	8C	/PM_RESET_N
TP2302	5B	/LIGHT_DISP
TP3503	3B	DVDD_CAMERA
TP3802	5B	/TX_ON
TP3901	4B	/BB_SIN26M
TP5101	7C	/N$453736

ALS BETRIEBSGEHEIMNIS ANVERTRAUT
ALLE RECHTE VORBEHALTEN

VERS.	CHANGE NUMBER	DATE	NAME
1	36658	02.03.2006	rba

DATE	17.10.2005
NAME	Bak
APPR'D	
STD	
MP PD HW 4 AAL	

Philippe
Variante 1
TESTPOINT DIAGRAMM (SIDE 1)

3:1

BENQ mobile

261947

SHEET 1+

(Created by BOM number: A5B00900212937-36658)

PROPRIETARY DATA, COMPANY CONFIDENTIAL
ALL RIGHTS RESERVED

ALS BETRIEBSGEHEIMNIS ANVERTRAUT
ALLE RECHTE VORBEHALTEN

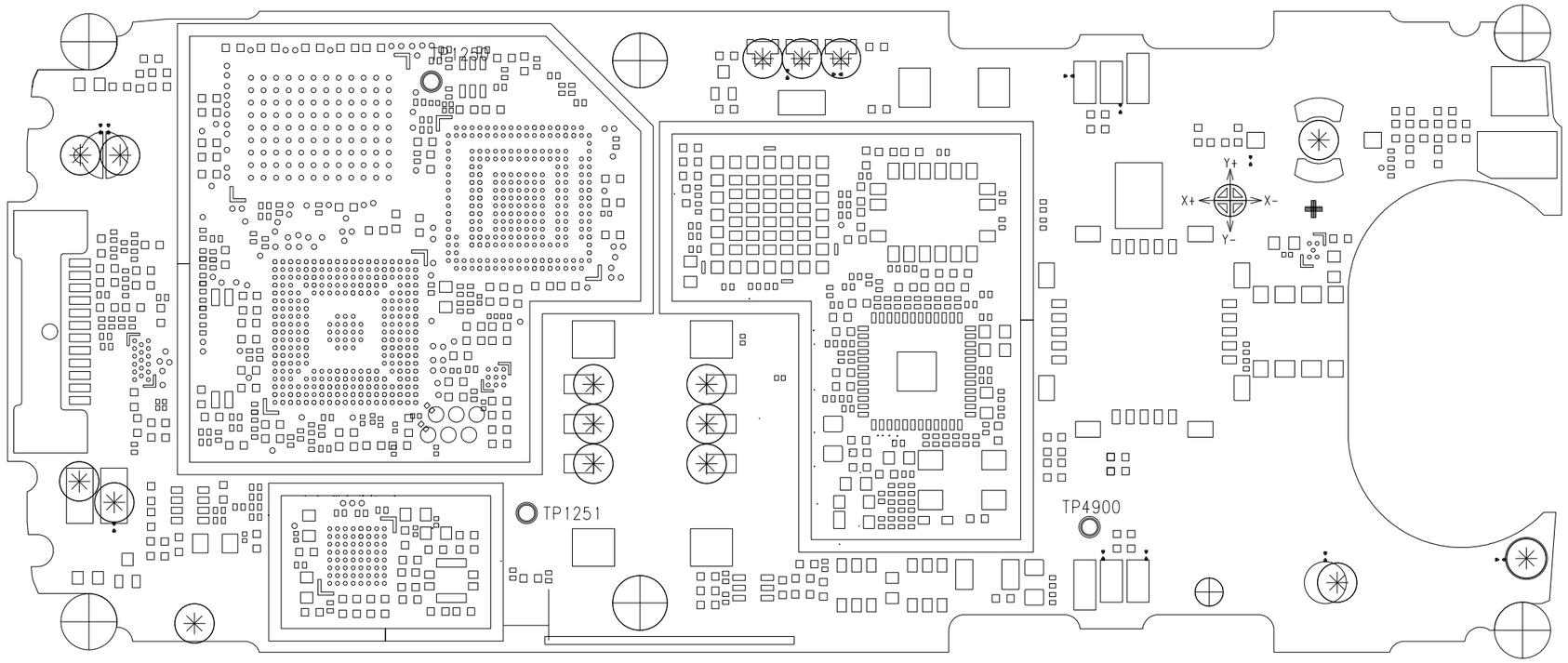

TP1250	4A	/F_VPP
TP1251	5B	1.8V_MEM2
TP4900	7C	/N$474313

				DATE	17.10.2005	Philippe Variante 1 TESTPOINT DIAGRAMM (SIDE 2)	3:1
				NAME	Bak		
				APPR'D			
				STD			
				MP PD HW 4 AAL			
				BENQ mobile		261947	SHEET 2-
1	36658	02.03.2006	rba				
VERS.	CHANGE NUMBER	DATE	NAME	(Created by BOM number: A5B00900212937-36658)			

Proprietary data, company confidential.
All rights reserved

Als Betriebsgeheimnis anvertraut
Alle Rechte vorbehalten

HIERARCHY	SHEET	PDF-SHEET
A5B00900211927-36261	index	sheet 1
	netlist1	sheet 2
	poslist1	sheet 3
	page1	----
	sheet1	sheet 4

				DATE	02.12.2005	MMI Philippe variant 1 / 4_Layer TOP HIERARCHY LEVEL SCHEMATIC	1:1
				USER	Braendskov		
				APPR'D			
				MP PD HW4 AAL			
				BENQ mobile		257390	index
1	36262	09.02.2006	rba				
VERS.	CHANGE NUMBER	DATE	NAME	(Created by BOM number: A5B00900211929-36262)			

Proprietary data, company confidential.
All rights reserved

Als Betriebsgeheimnis anvertraut
Alle Rechte vorbehalten

KB_ON_OFF
/sheet1 10 B
/sheet1 3 E

KP_IN0
/sheet1 9 C
/sheet1 1 B

KP_IN1
/sheet1 9 C
/sheet1 1 B

KP_IN2
/sheet1 9 C
/sheet1 1 C

KP_IN3
/sheet1 9 C
/sheet1 1 C

KP_IN4
/sheet1 9 B
/sheet1 1 D

KP_IN5_OUT6
/sheet1 10 B
/sheet1 4 D

KP_OUT0
/sheet1 10 C
/sheet1 1 D

KP_OUT1
/sheet1 10 C
/sheet1 2 D

KP_OUT2
/sheet1 10 C
/sheet1 3 D

KP_OUT3
/sheet1 10 B
/sheet1 4 D

LIGHT_KP
/sheet1 10 B
/sheet1 9 D

VCC_LIGHT
/sheet1 10 C
/sheet1 9 A

				DATE	02.12.2005	MMI Philippe variant 1 / 4_Layer TOP HIERARCHY LEVEL SCHEMATIC	1:1
				USER	Braendskov		
				APPR'D			
				MP PD HW4 AAL			
				BENQ mobile		257390	netlist1
1	36262	09.02.2006	rba				
VERS.	CHANGE NUMBER	DATE	NAME	(Created by BOM number: A5B00900211929-36262)			

Proprietary data, company confidential.
All rights reserved

Als Betriebsgeheimnis anvertraut
Alle Rechte vorbehalten

1	2	3	4	5

TP12 /sheet1 8 A
TP14 /sheet1 8 C
TP11 /sheet1 8 A
TP16 /sheet1 8 D
TP15 /sheet1 8 C
TP13 /sheet1 8 B
V11 /sheet1 8 A
V12 /sheet1 8 B
V13 /sheet1 8 B
V14 /sheet1 8 C
V15 /sheet1 8 C
V16 /sheet1 8 D

A
B
C
D
E

				DATE	02.12.2005	MMI Philippe variant 1 / 4_Layer TOP HIERARCHY LEVEL SCHEMATIC	1:1
				USER	Braendskov		
				APPR'D			
				MP PD HW4 AAL			
				BENQ mobile		257390	poslist1
1	36262	09.02.2006	rba				
VERS.	CHANGE NUMBER	DATE	NAME	(Created by BOM number: A5B00900211929-36262)			

Proprietary data, company confidential.
All rights reserved

Als Betriebsgeheimnis anvertraut
Alle Rechte vorbehalten

KEYPAD_SGOLD2

2900-2949

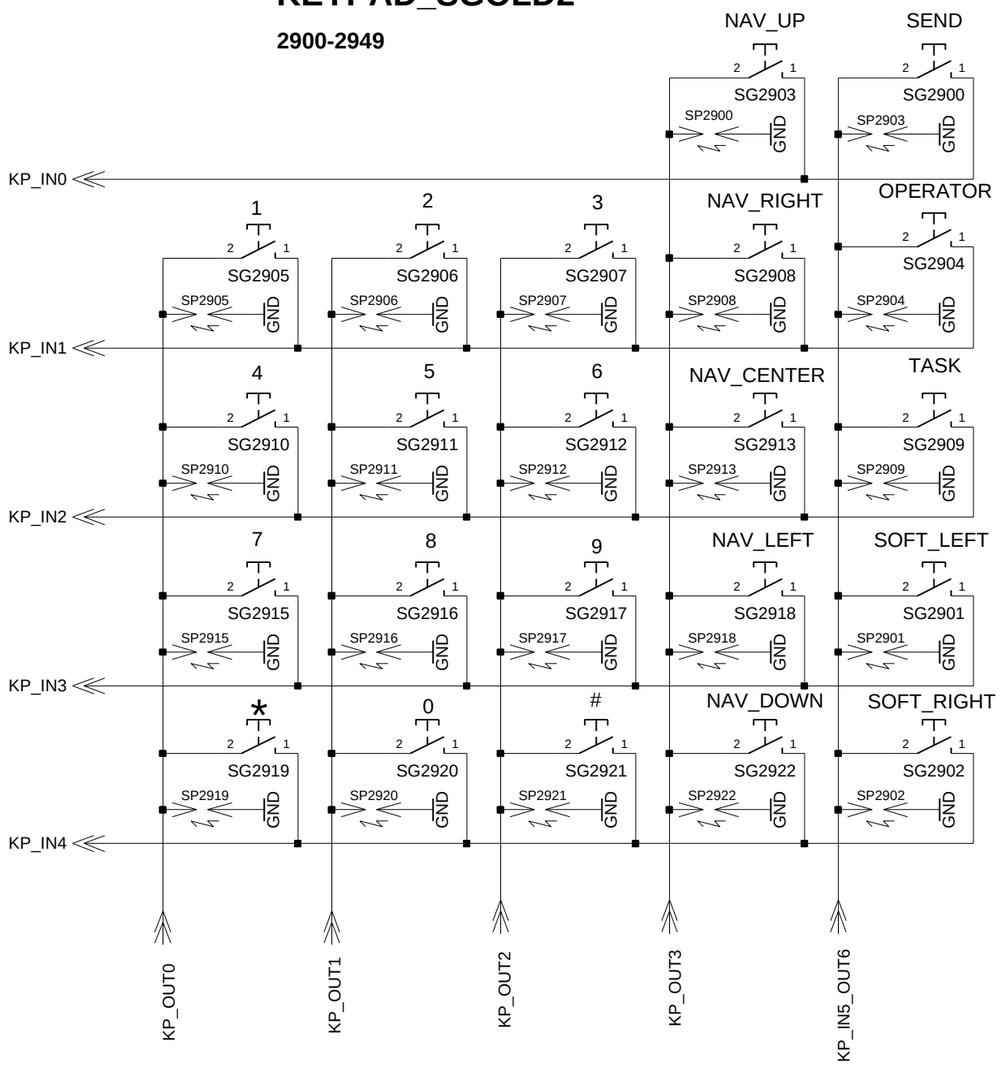

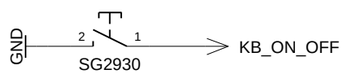

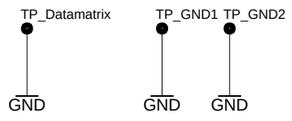

	MINOS
END 0	X
1	X
2	X
3	X
4	X
5	X
6	X
7	X
8	X
9	X
*	X
#	X
SEND	X
END	X
SOFT LEFT	X
SOFT RIGHT	X
OPERATOR	X
TASK	X
CUSTOMER	
NAVI UP	X
NAVI LEFT	X
NAVI RIGHT	X
NAVI CENTER	X
NAVI DOWN	X
SIDE1/ SIDE2	X
SIDE3/ SIDE4	X

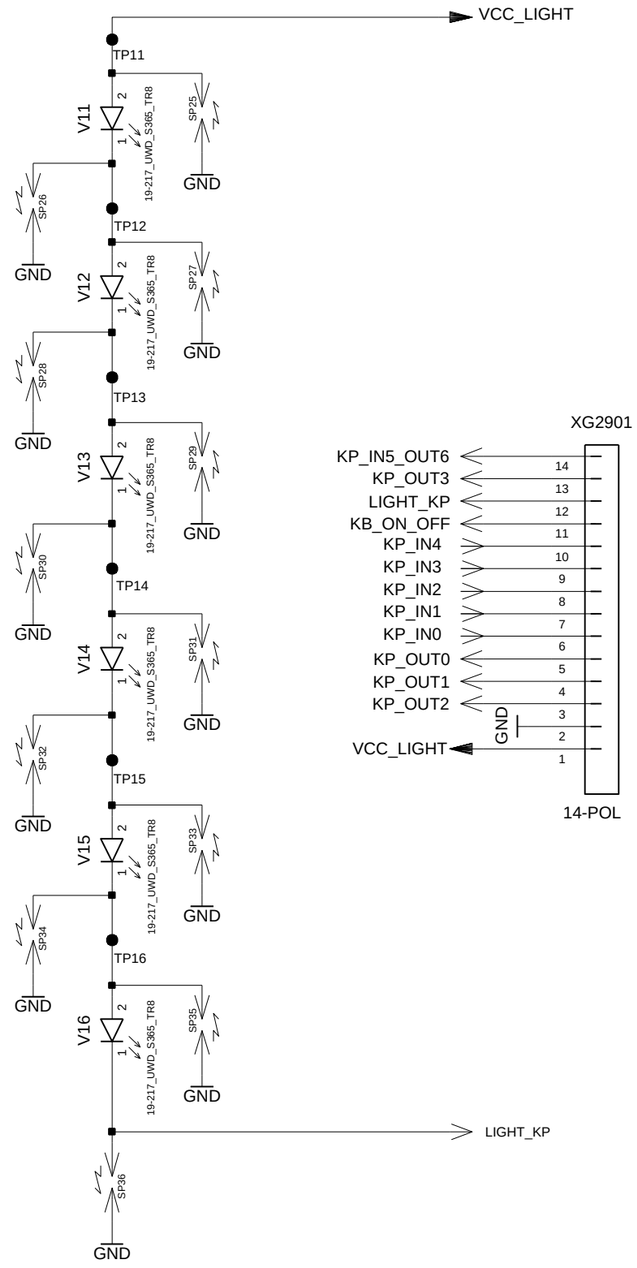

				DATE	02.12.2005	MMI Philippe variant 1 / 4_Layer TOP HIERARCHY LEVEL SCHEMATIC	1:1
				USER	Braendskov		
				APPR'D			
				MP PD HW4 AAL			
				BENQ mobile		257390	sheet1
1	36262	09.02.2006	rba				
VERS.	CHANGE NUMBER	DATE	NAME	(Created by BOM number: A5B00900211929-36262)			

PROPRIETARY DATA, COMPANY CONFIDENTIAL
ALL RIGHTS RESERVED

ALS BETRIEBSGEHEIMNIS ANVERTRAUT
ALLE RECHTE VORBEHALTEN

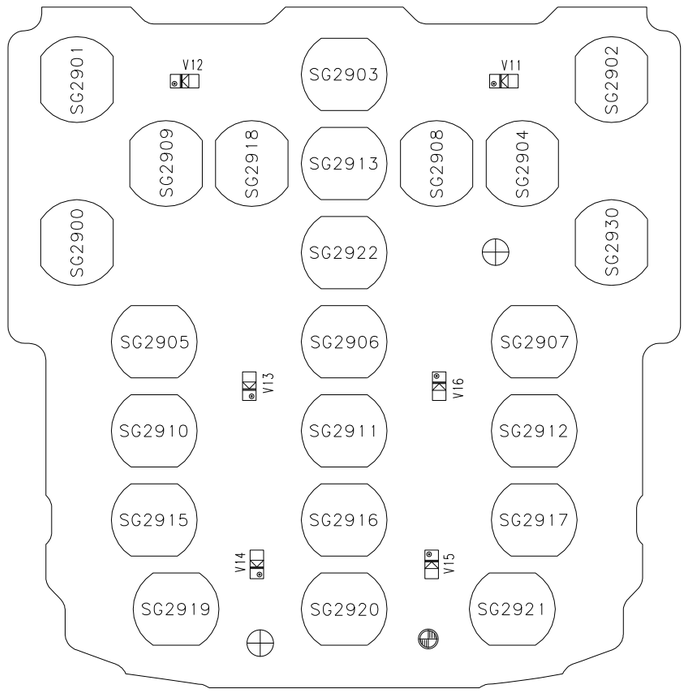

V11	5B
V12	4B
V13	4C
V14	4D
V15	5D
V16	5C

Achtung : Hoehenprofil C24___-___-___-__-42 (gilt nur fuer Entwicklung)
Liefervarianten siehe : V24851-Z2000-A1-*-35

				DATE	02.12.2005	MMI Philippe variant 1 / 4_Layer WIRING DIAGRAMM (SOLDER SIDE 1)	3:1
				NAME	Braendskov		
				APPR'D			
				STD			
				MP PD HW4 AAL			
				BENQ mobile		257391	SHEET 1+
1	36262	09.02.2006	rba				
VERS.	CHANGE NUMBER	DATE	NAME	(Created by BOM number: A5B00900211929-36262)			

PROPRIETARY DATA, COMPANY CONFIDENTIAL
ALL RIGHTS RESERVED

ALS BETRIEBSGEHEIMNIS ANVERTRAUT
ALLE RECHTE VORBEHALTEN

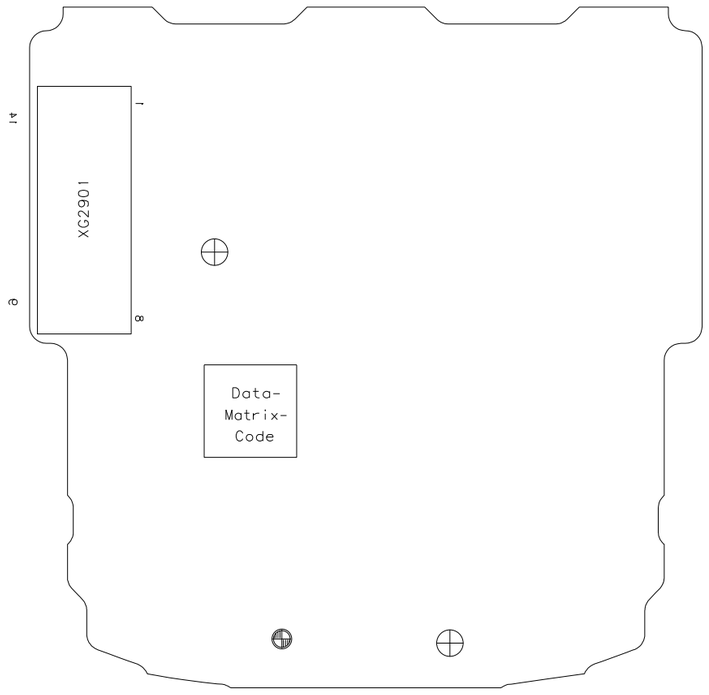

Achtung : Hoehenprofil C24___-___-___-__-42 (gilt nur fuer Entwicklung)
Liefervarianten siehe : V24851-Z2000-A1-*-35

				DATE	02.12.2005	MMI Philippe variant 1 / 4_Layer WIRING DIAGRAMM (SOLDER SIDE 2)	3:1
				NAME	Braendskov		
				APPR'D			
				STD			
				MP PD HW4 AAL			
				BENQ mobile		257391	SHEET 2+
1	36262	09.02.2006	rba				
VERS.	CHANGE NUMBER	DATE	NAME	(Created by BOM number: A5B00900211929-36262)			

PROPRIETARY DATA, COMPANY CONFIDENTIAL
ALL RIGHTS RESERVED

ALS BETRIEBSGEHEIMNIS ANVERTRAUT
ALLE RECHTE VORBEHALTEN

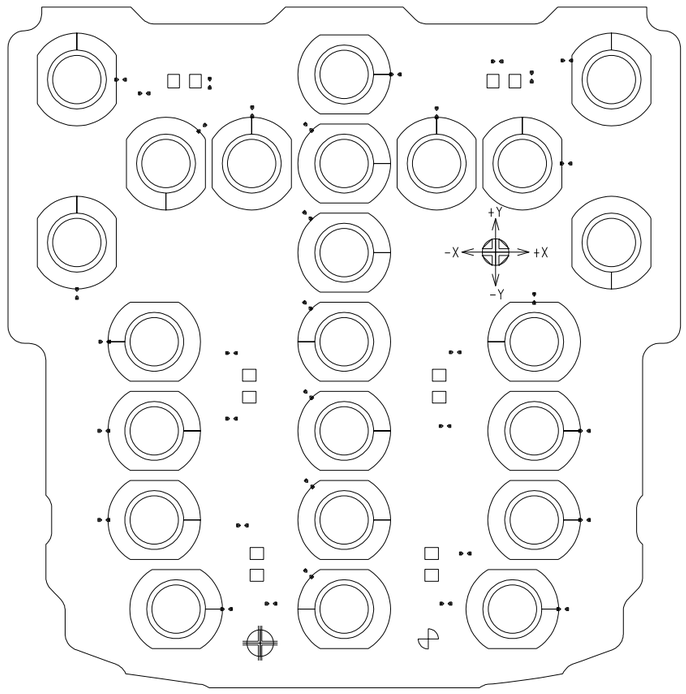

				DATE	02.12.2005	MMI Philippe variant 1 / 4_Layer TESTPOINT DIAGRAMM (SIDE 1)	3:1
				NAME	Braendskov		
				APPR'D			
				STD			
				MP PD HW4 AAL			
				BENQ mobile		257392	SHEET 1+
1	36262	09.02.2006	rba				
VERS.	CHANGE NUMBER	DATE	NAME	(Created by BOM number: A5B00900211929-36262)			

PROPRIETARY DATA, COMPANY CONFIDENTIAL
ALL RIGHTS RESERVED

ALS BETRIEBSGEHEIMNIS ANVERTRAUT
ALLE RECHTE VORBEHALTEN

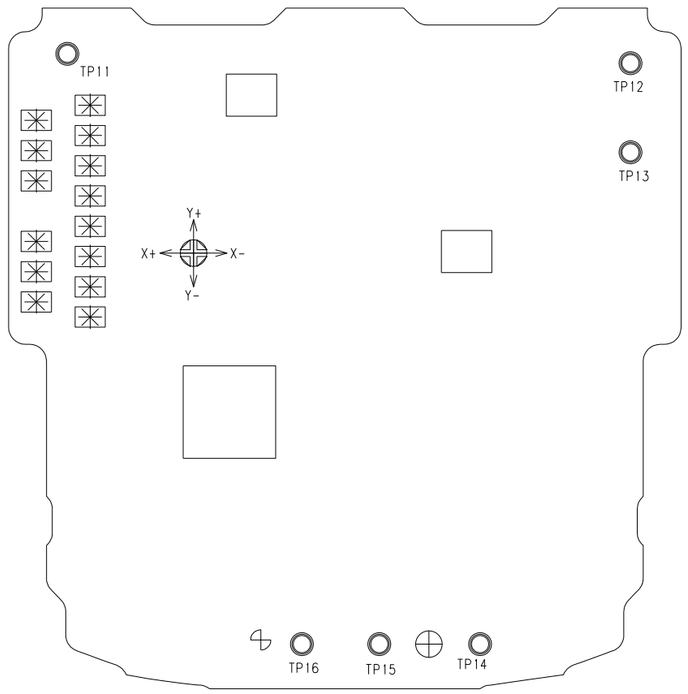

TP11	5B	VCC_LIGHT
TP12	7B	/N$11119
TP13	7C	/N$11120
TP14	7D	/N$11122
TP15	6D	/N$11121
TP16	6D	/N$11123

				DATE	02.12.2005	MMI Philippe variant 1 / 4_Layer TESTPOINT DIAGRAMM (SIDE 2)	3:1
				NAME	Braendskov		
				APPR'D			
				STD			
				MP PD HW4 AAL			
				BENQ mobile		257392	SHEET 2-
1	36262	09.02.2006	rba				
VERS.	CHANGE NUMBER	DATE	NAME	(Created by BOM number: A5B00900211929-36262)			