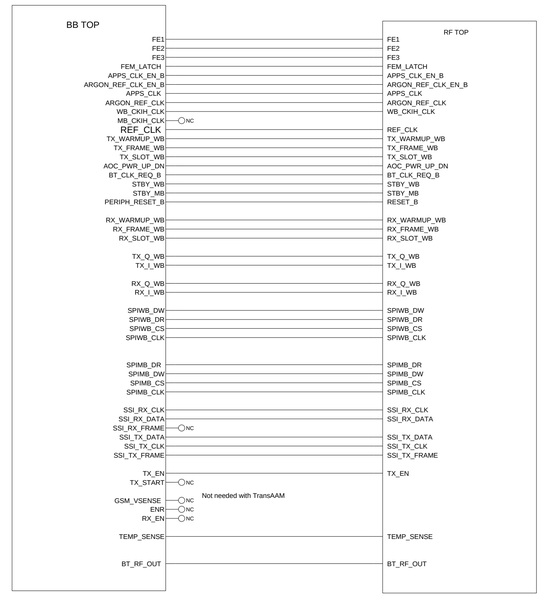


| | | | | | | | |
|---|---|---|---|---|---|---|---|
| | | | Engineer | COMPANY NAME<br>Address<br>City | | | |
| | | | Drawn by | | | | |
| | | | R&D CHK | TITLE<br>Emerald EMEA | | | Size<br>D |
| | | | DOC CTRL CHK | | | | |
| | | | MFG CTRL CHK | | | | |
| Changed by | Date Released | Time | QA CHK | REV | Drawing Number<br>8471274E01 | Sheet of | |

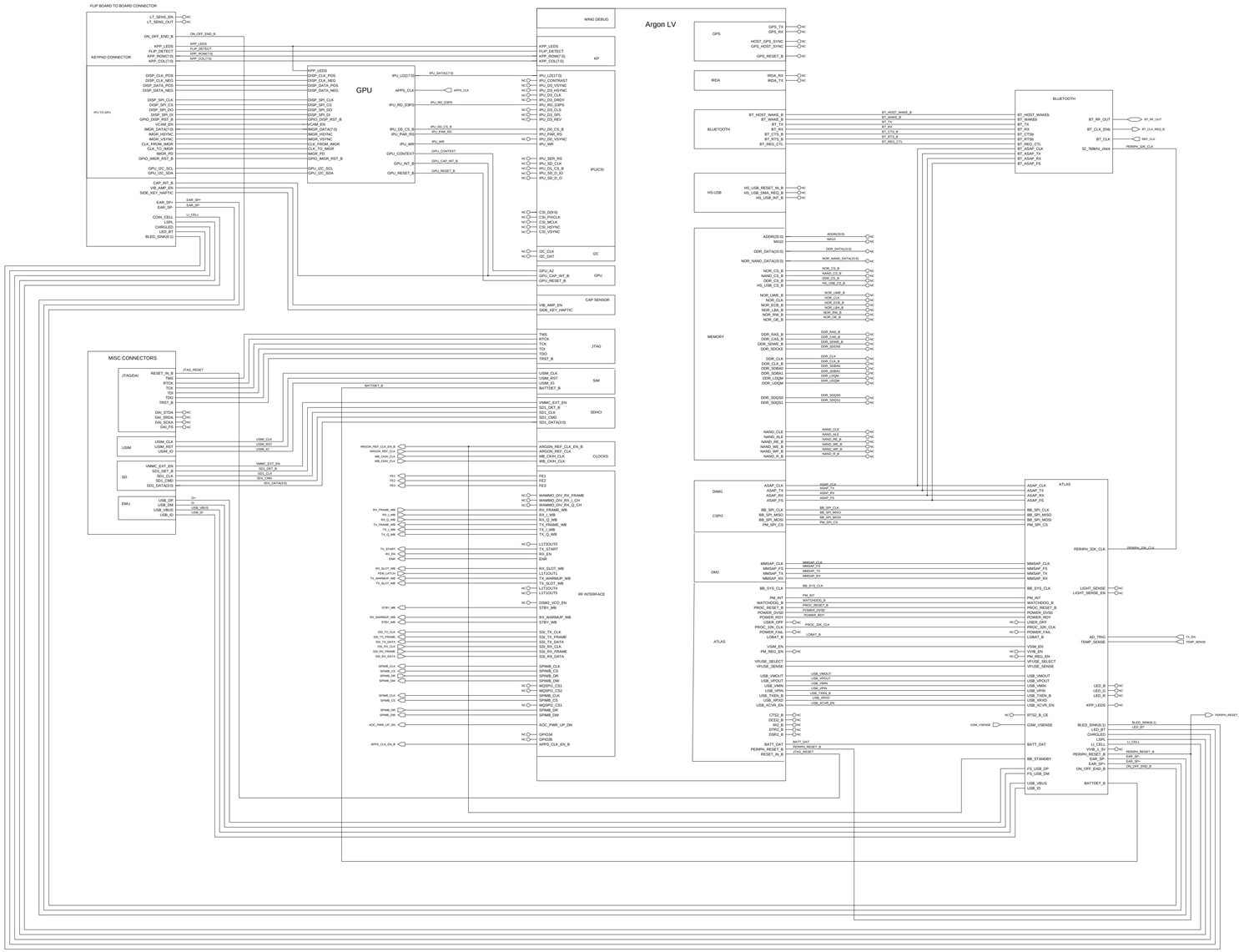


| | | | | | | | |
|---|---|---|---|---|---|---|---|
| Engineer: G15829 | | | | MOTOROLA, INC. | | | |
| Drawn by: G15829 | | | | | | | |
| R&D CHK: | | | | TITLE: Baseband_Top | | | Size: E |
| DOC CTRL CHK: | | | | Emerald EMEA | | | B1B A |
| MFG ENGR CHK: | | | | | | | |
| Changed by: | Date Changed: | Time Changed: | QA CHK: | REV: | Drawing Number: | Page: | |
| | | | | | Revision | 1 | |

MOTOROLA CONFIDENTIAL PROPRIETARY

4 1 3 A

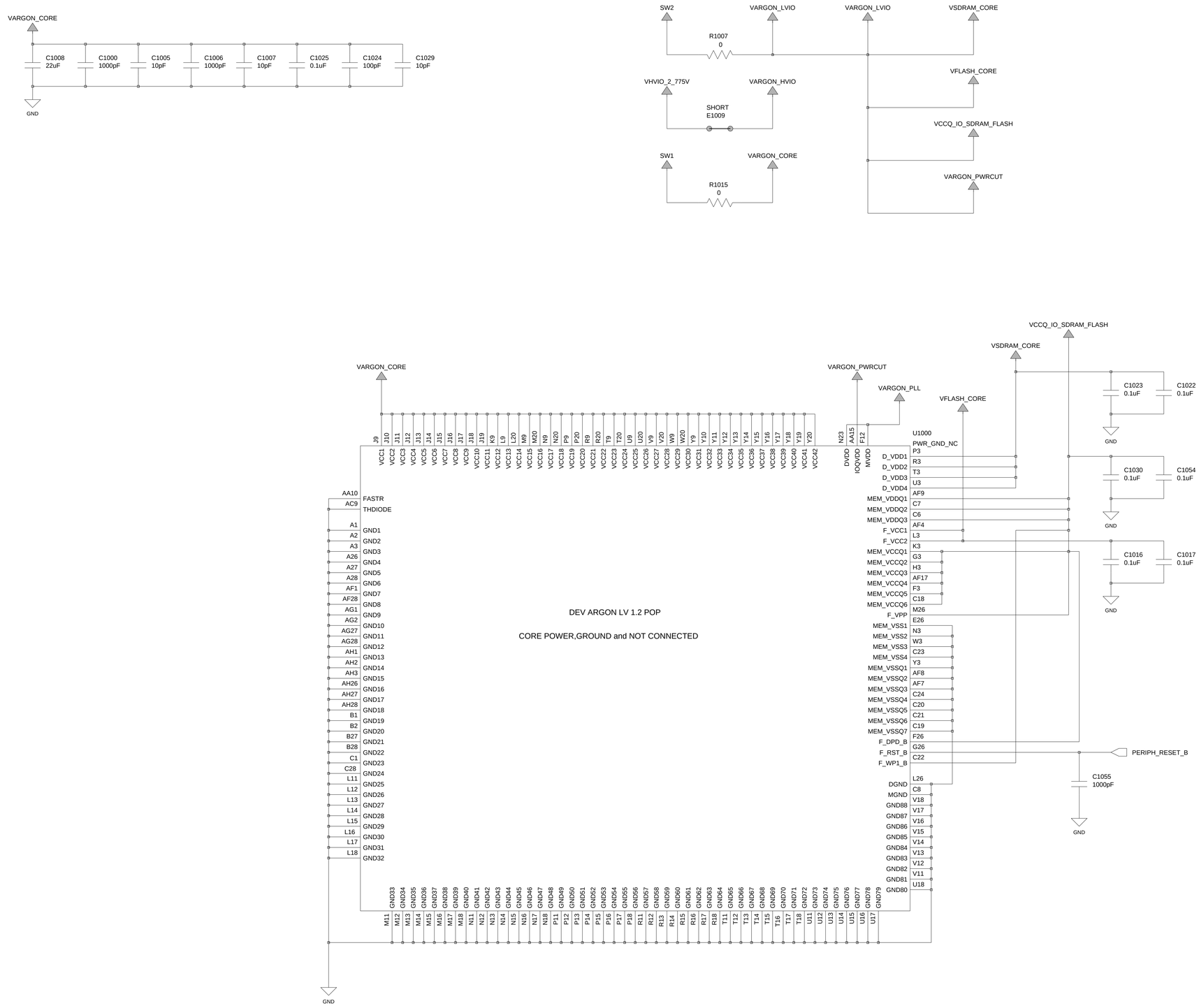


| | | | |
|---|---|---|---|
| Engineer: G15829 | MOTOROLA INC. | | |
| Drawn by: G15829 | | | |
| R&D CHK: | TITLE: ARGON Core_Power | | Size: 11x17 |
| DOC CTRL CHK: | | | |
| MFG CTRL CHK: | | | |
| QA CHK: | REV: | Drawing Number: | Page: / Of: |
| Changed by: | Date: | | Time: |

MOTOROLA CONFIDENTIAL PROPRIETARY

4 1 3 A

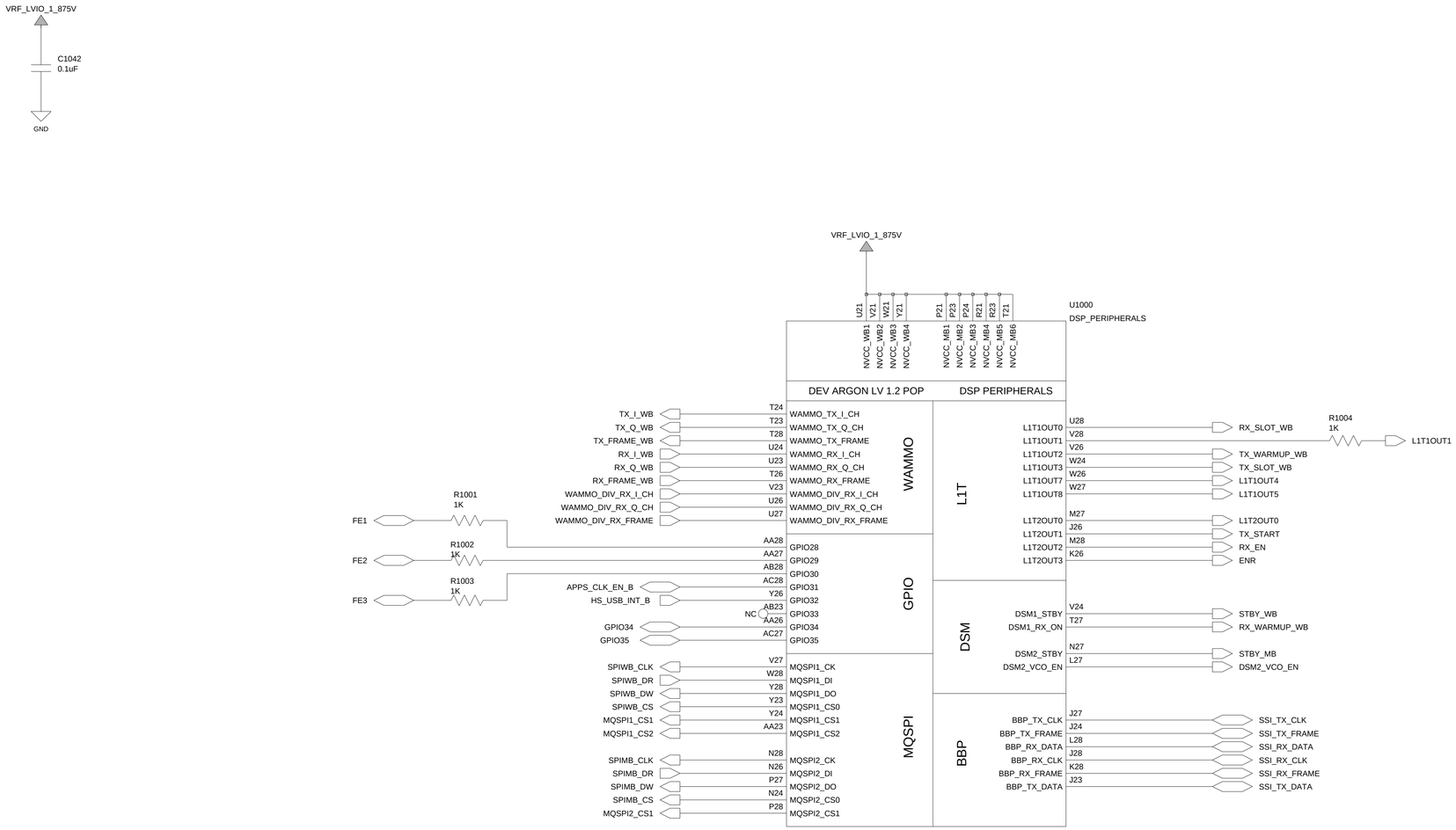


| | |
|---|---|
| Engineer: G15829 | MOTOROLA INC. |
| Drawn by: G15829 | |
| R&D CHK: | TITLE: ARGON DSP — Size: 11x17 |
| DOC CTRL CHK: | |
| MFG CTRL CHK: | |
| QA CHK: | REV: — Drawing Number: 8xxxxxxxxxx — Page: — Of: |
| Changed by: | Date: — Time: |

MOTOROLA CONFIDENTIAL PROPRIETARY

4 1 3 A

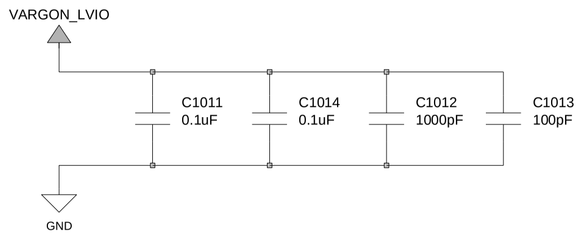


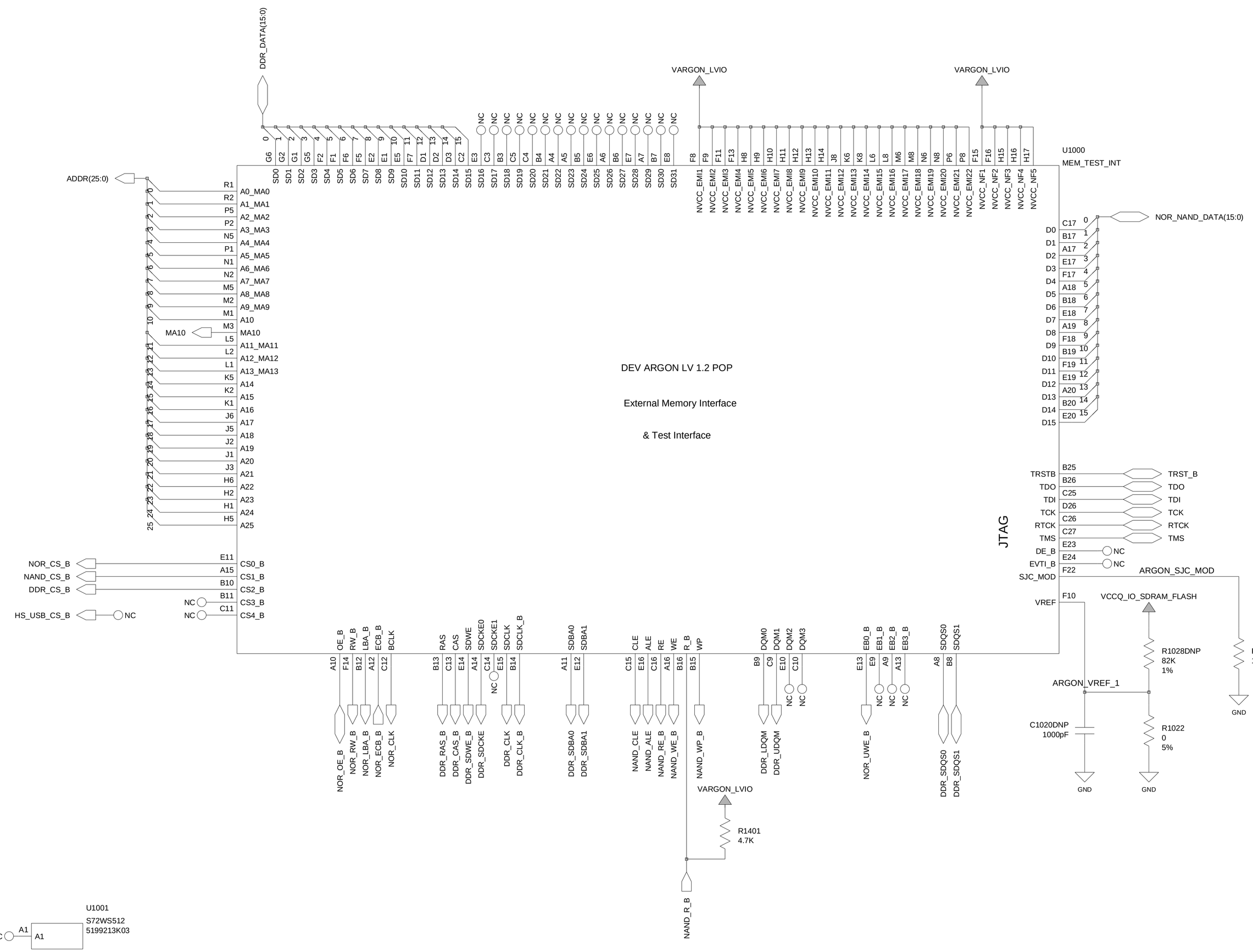


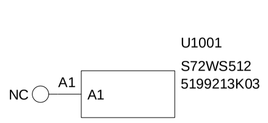


5199213K03 (64/64/64 - Spansion NOR / Hynix NAND / Micron DDR)

OLD - 5199213K02 (2x32/64/64 - Spansion NOR / Hynix NAND / Micron DDR)

| | | | |
|---|---|---|---|
| Engineer: G15829 | MOTOROLA INC. | | |
| Drawn by: G15829 | | | |
| R&D CHK: | TITLE: ARGON Memory | | Size: 11x17 |
| DOC CTRL CHK: | | | |
| MFG CTRL CHK: | | | |
| QA CHK: | REV: | Drawing Number: 8xxxxxxx | Page: / Of: |
| Changed by: | Date: | | Time: |

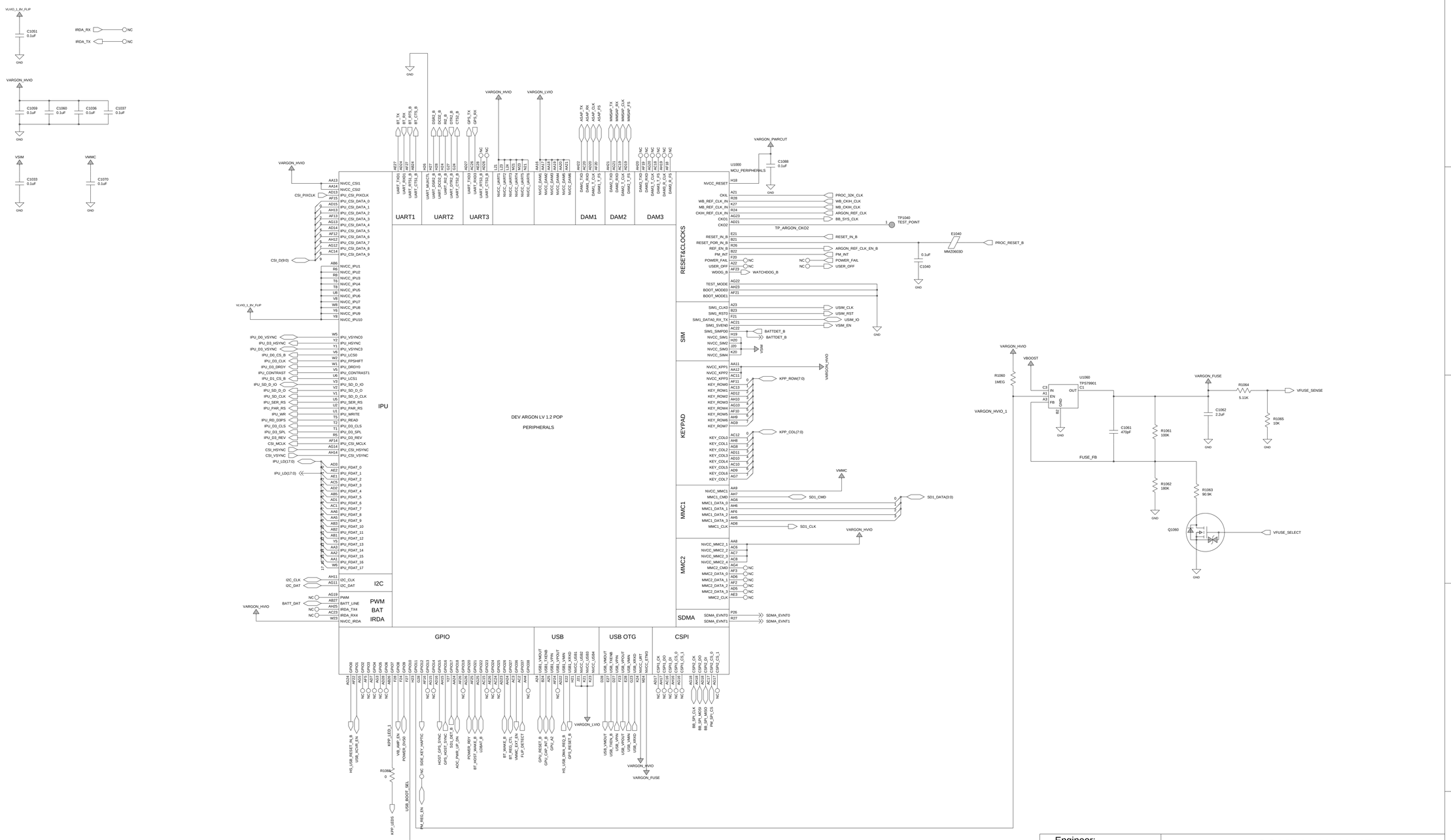


| | |
|---|---|
| Engineer: G15829 | COMPANY NAME<br>Address<br>City |
| Drawn by: G15829 | |
| R&D CHK: | TITLE: Argon PERIPHERALS |
| DOC CTRL CHK: | Size: D |
| MFG CTRL CHK: | 8 1 5 A |

| Changed by: | Date Changed: | Time: | QA CHK: | REV: | Drawing Number: | Page: HERALS |
|---|---|---|---|---|---|---|

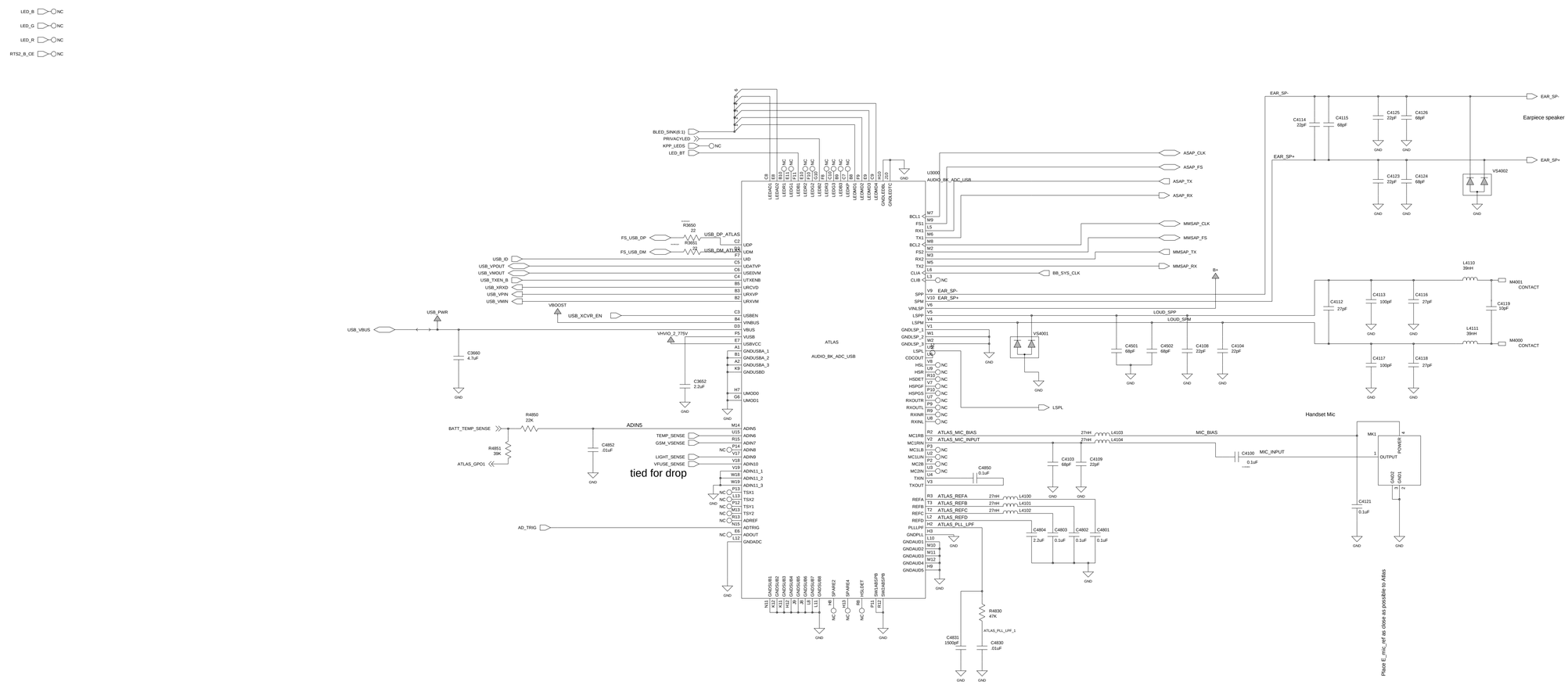


| | | | | | | | |
|---|---|---|---|---|---|---|---|
| Engineer: AMK088 | MOTOROLA | | | | | | |
| Drawn by: AMK088 | Confidential Proprietary | | | | | | |
| R&D CHK: | TITLE: | | | | | Size: D | |
| DOC CTRL CHK: | | | | | | 8 1 5 A | |
| MFG CTRL CHK: | Emerald EMEA Atlas Audio | | | | | | |
| Changed by: | Date Changed: | Time: | QA CHK: | REV: | Drawing Number: 8xxxxxxxx | | Page: _AUDIO |

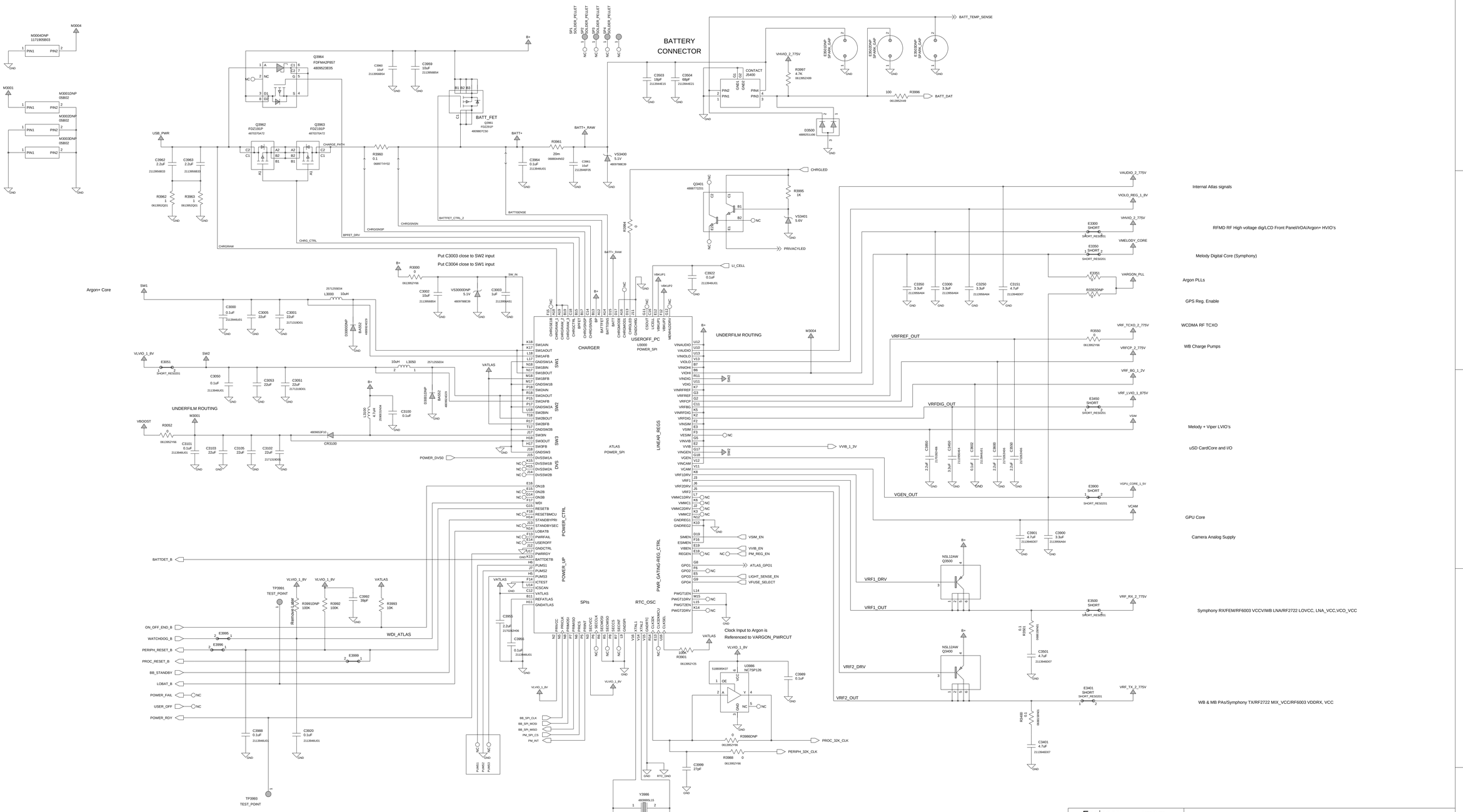


| | | | |
|---|---|---|---|
| Engineer: Song Zhang | COMPANY NAME<br>Address<br>City | | |
| Drawn by: Song Zhang | | | |
| R&D CHK: | TITLE: Emerald EMEA ATLAS POWER | Size: D | 8 1 5 A |
| DOC CTRL CHK: | | | |
| MFG CTRL CHK: | | | |

| Changed by: | Date Changed: | Time: | QA CHK: | REV: | Drawing Number: | Page: |
|---|---|---|---|---|---|---|
| jspence3 | Friday, August 20, 2004 | 10:15:22 am | | | | _POWER |

MOTOROLA CONFIDENTIAL PROPRIETARY

4 1 3 A

| | |
|---|---|
| Engineer: W17698 | MOTOROLA INC. |
| Drawn by: W17698 | |
| R&D CHK: | TITLE: BLUETOOTH |
| DOC CTRL CHK: | Size: 11x17 |
| MFG CTRL CHK: | |
| QA CHK: | REV: - Drawing Number: Page: Of: |
| Changed by: | Date: Time: |

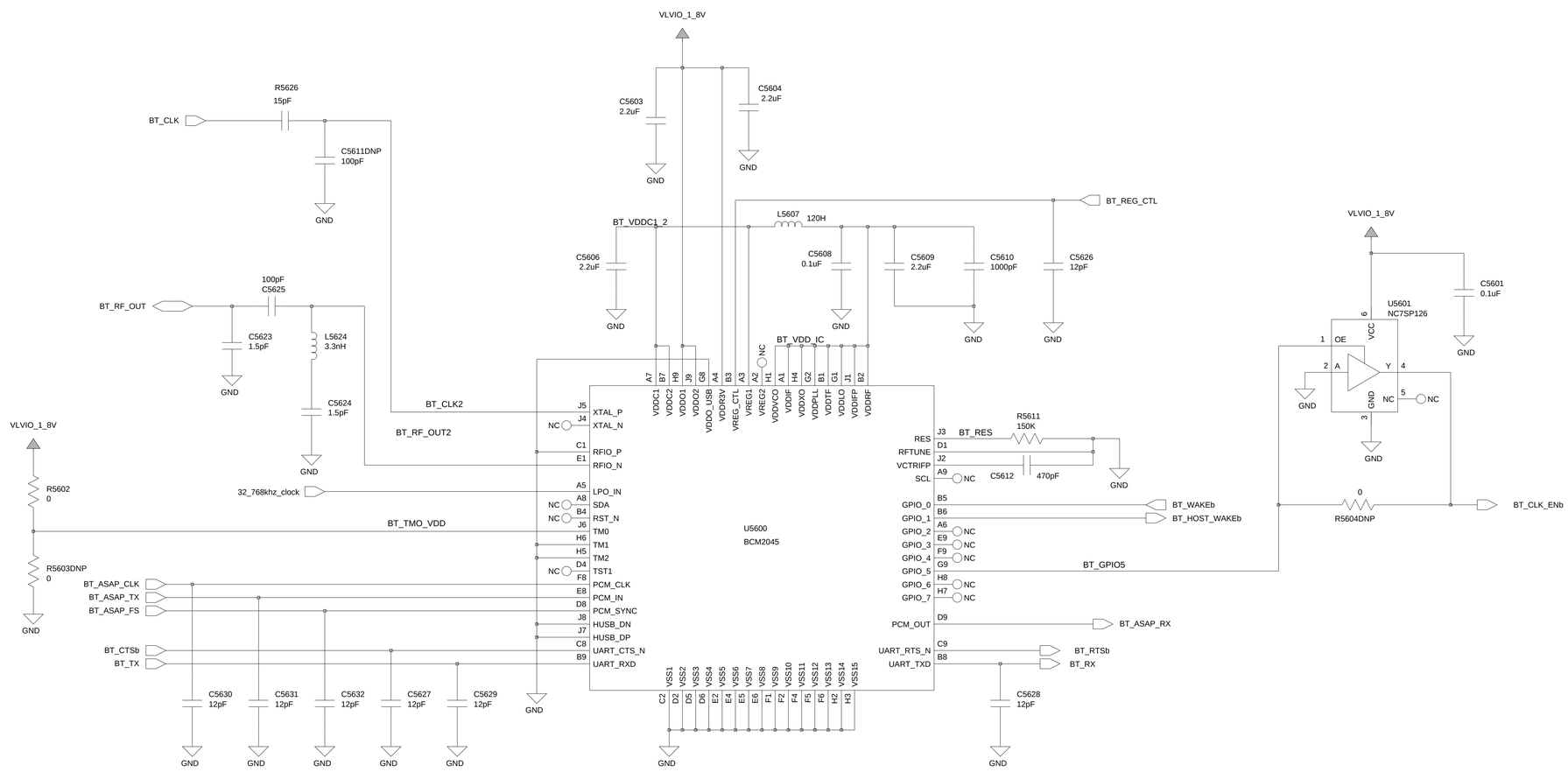

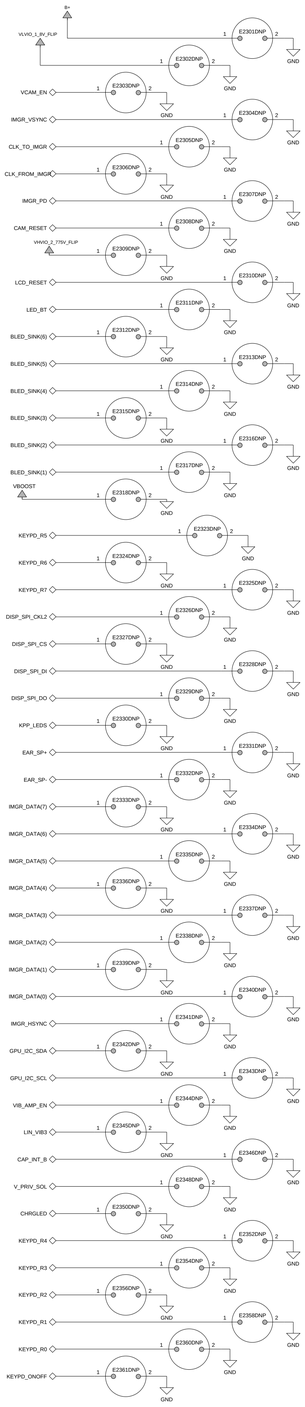


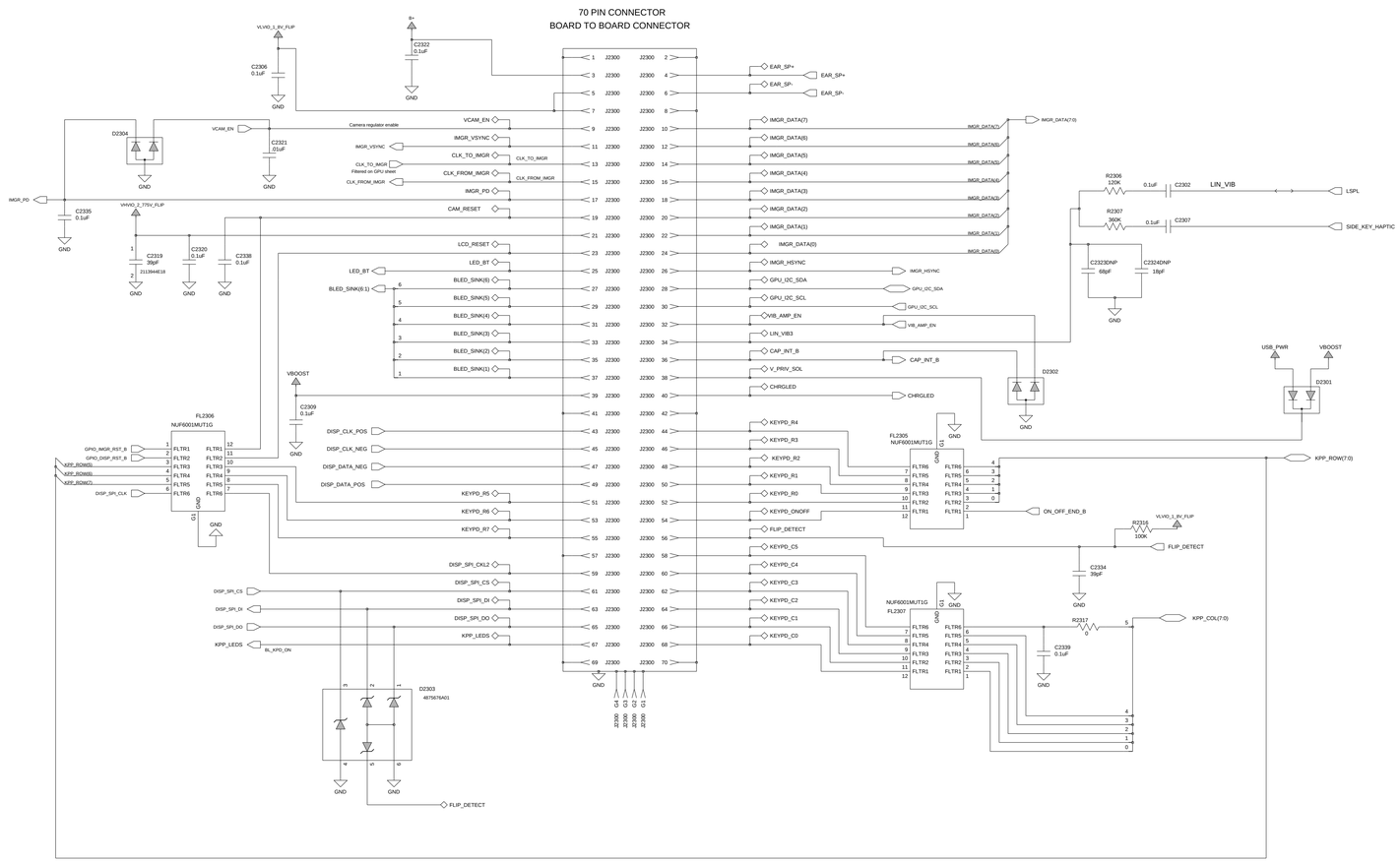


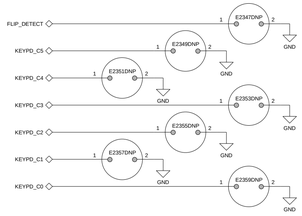


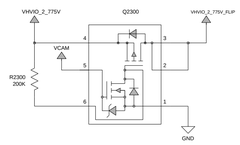


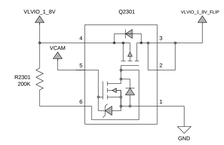


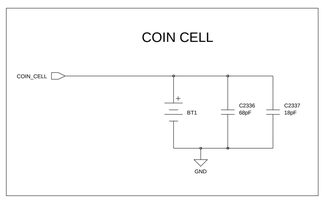


| | | | | | |
|---|---|---|---|---|---|
| Engineer: | COMPANY NAME<br>Address<br>City | | | | |
| Drawn by: | | | | | |
| R&D CHK: | TITLE: BOARD TO BOARD CONNECTOR | | | | Size: D |
| DOC CTRL CHK: | | | | | 8 1 5 A |
| MFG CTRL CHK: | | | | | |
| Changed by: fos001 | Date Changed: Wednesday, June 7, 2006 | Time: 2:09:30 pm | QA CHK: | REV: | Drawing Number: / Page: 2 |

MOTOROLA INTERNAL USE ONLY

4 1 3 A

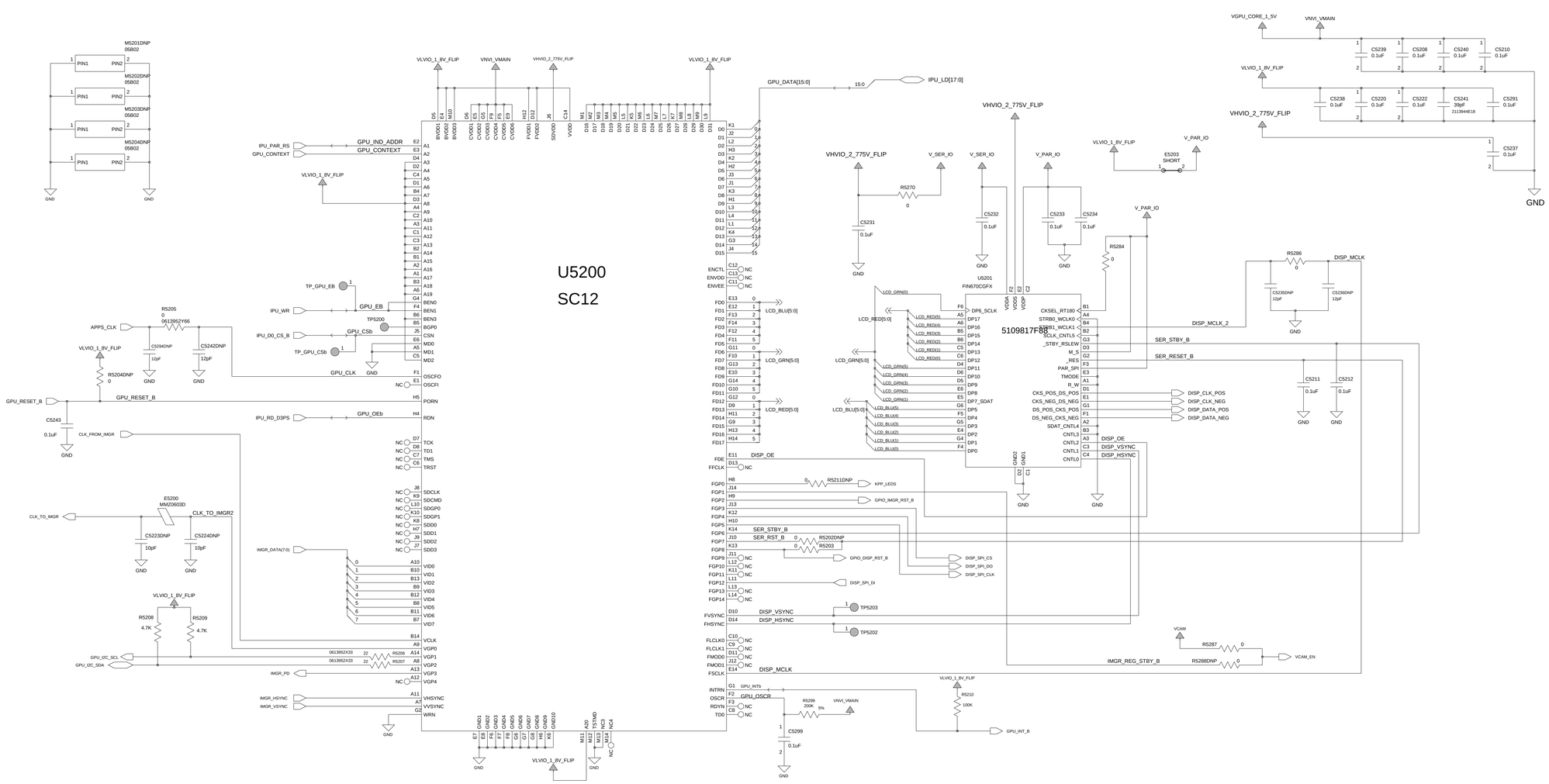


| | |
|---|---|
| Engineer: | MOTOROLA INC. |
| Drawn by: Shimon Goldstein | |
| R&D CHK: | TITLE: GPU — Size: 11x24 |
| DOC CTRL CHK: | |
| MFG CTRL CHK: | |
| QA CHK: | REV: / Drawing Number: / Page: / Of: |
| Changed by: fos001 | Date: Wednesday, June 7, 2006 — Time: 3:13:10 pm |

MOTOROLA CONFIDENTIAL PROPRIETARY

| Engineer: | MOTOROLA INC. | | |
|---|---|---|---|
| Drawn by: | | | |
| R&D CHK: | TITLE: MISC CONNECTORS | | Size: |
| DOC CTRL CHK: | | | |
| MFG CTRL CHK: | | | |
| QA CHK: | REV: | Drawing Number: | Page: / Of: |
| Changed by: | Date: | | Time: |

# EMU CONNECTOR

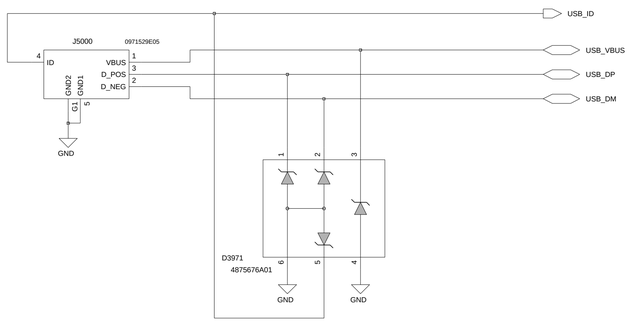


# USIM

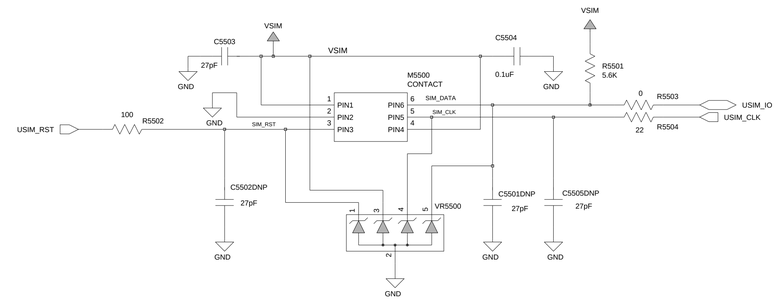


# JTAG/DAI

12-pin JTAG connector

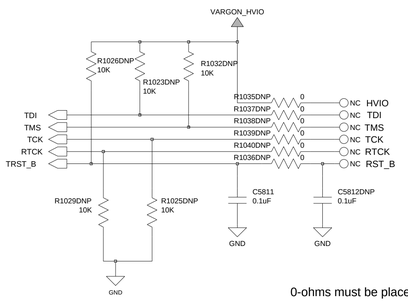


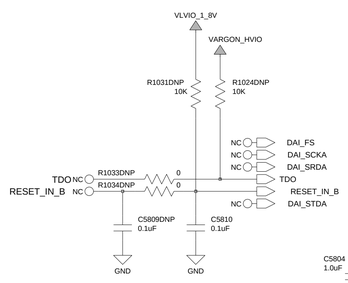


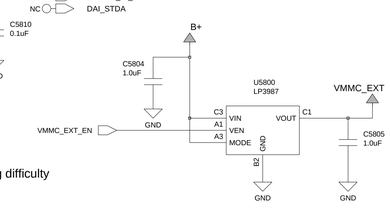


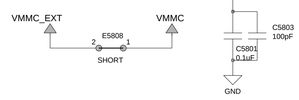


0-ohms must be placed where ESD cannot reach them

DAI lines disconnected due to routing difficulty

If JTAG is placed, place 0-ohms, pull-ups/downs. DNP C5810 and C5811

If JTAG is NOT placed, DNP 0-ohms, DNP pull-ups/downs, place C5809, C5810, C5811, C5812

# TRANSFLASH

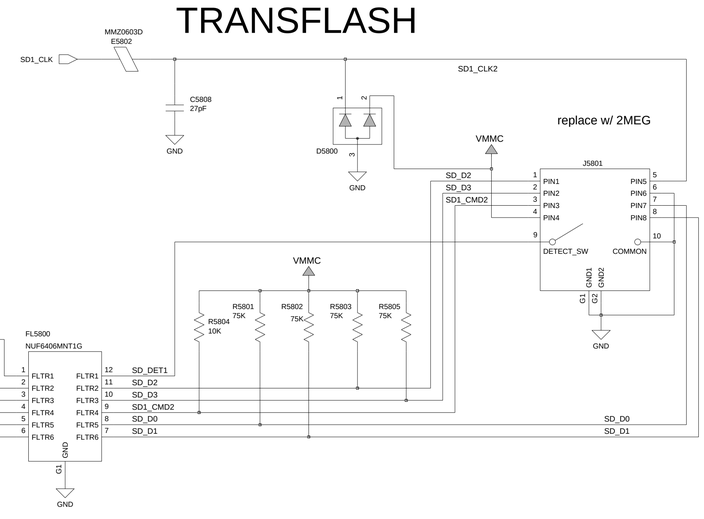

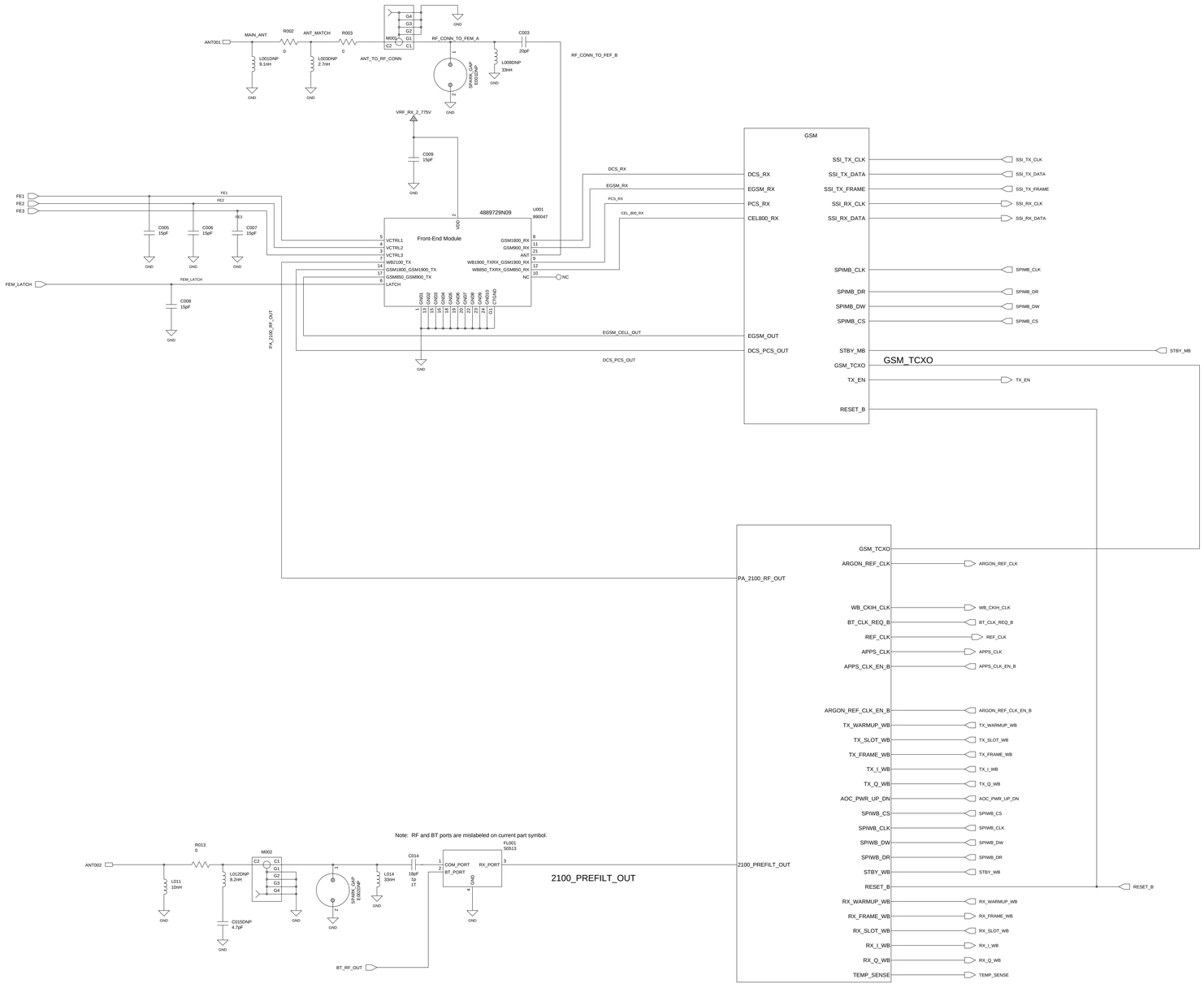


| | | | | | | | |
|---|---|---|---|---|---|---|---|
| Engineer<br>- | COMPANY NAME<br>Address<br>City | | | | | | |
| Drawn by<br>- | | | | | | | |
| R&D CHK | TITLE<br>RF_TOP<br>Emerald EMEA | | | | | | Size<br>D |
| DOC CTRL CHK | | | | | | | |
| MFG CTRL CHK | | | | | | | |
| Changed by<br>cbh030 | Date Changed<br>Wednesday, April 14, 2004 | Time<br>3:56:11 pm | QA CHK | REV | Drawing Number | Sheet of | |

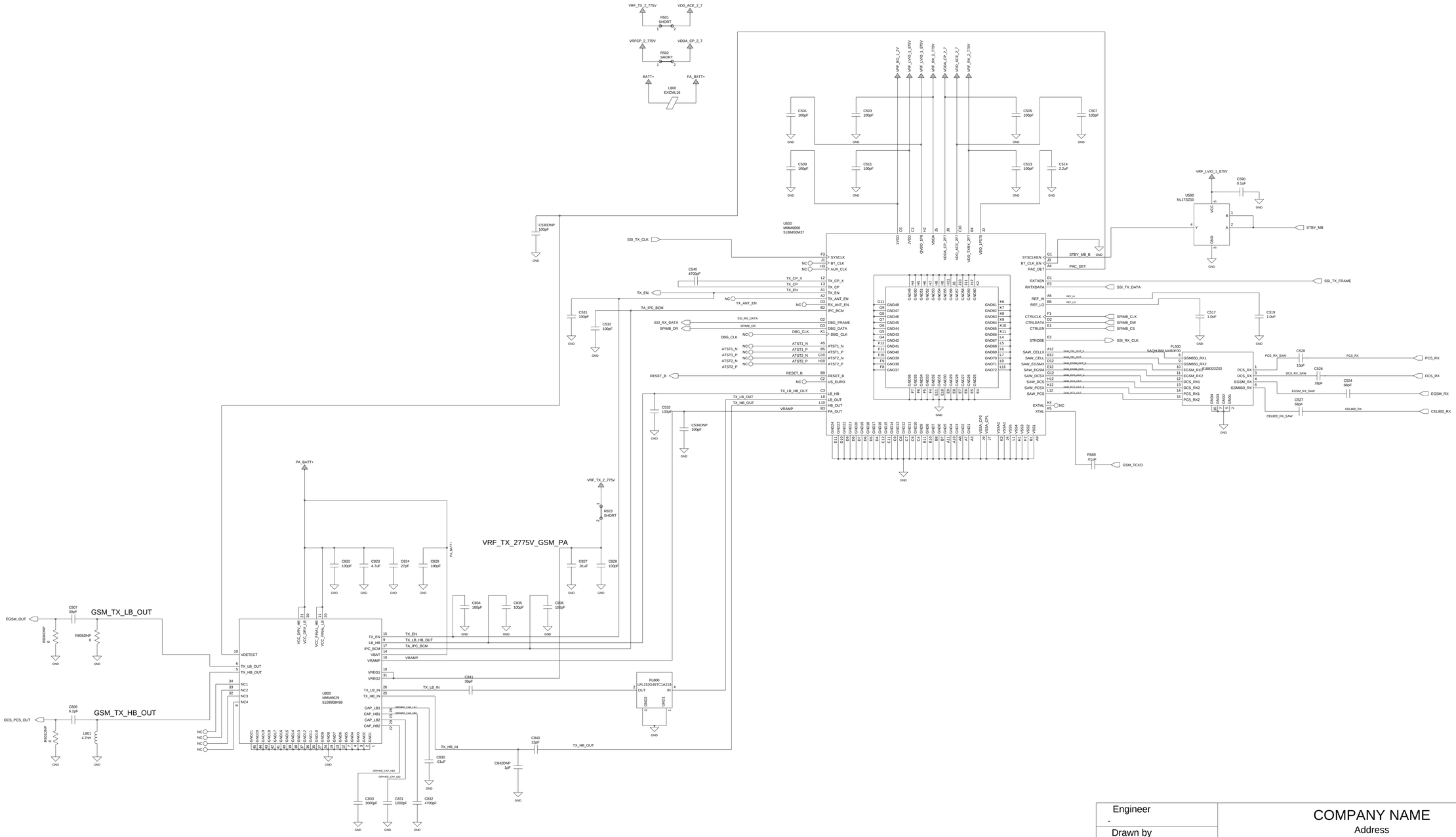


| | | | | | | | |
|---|---|---|---|---|---|---|---|
| Engineer - | COMPANY NAME Address City | | | | | | |
| Drawn by - | | | | | | | |
| R&D CHK | TITLE GSM TRANSAM Emerald EMEA | | | | | Size D | |
| DOC CTRL CHK | | | | | | | |
| MFG CTRL CHK | | | | | | | |
| Changed by cbh030 | Date Changed Wednesday, April 14, 2004 | Time 4:56:08 pm | QA CHK | REV | Drawing Number | Sheet of | |

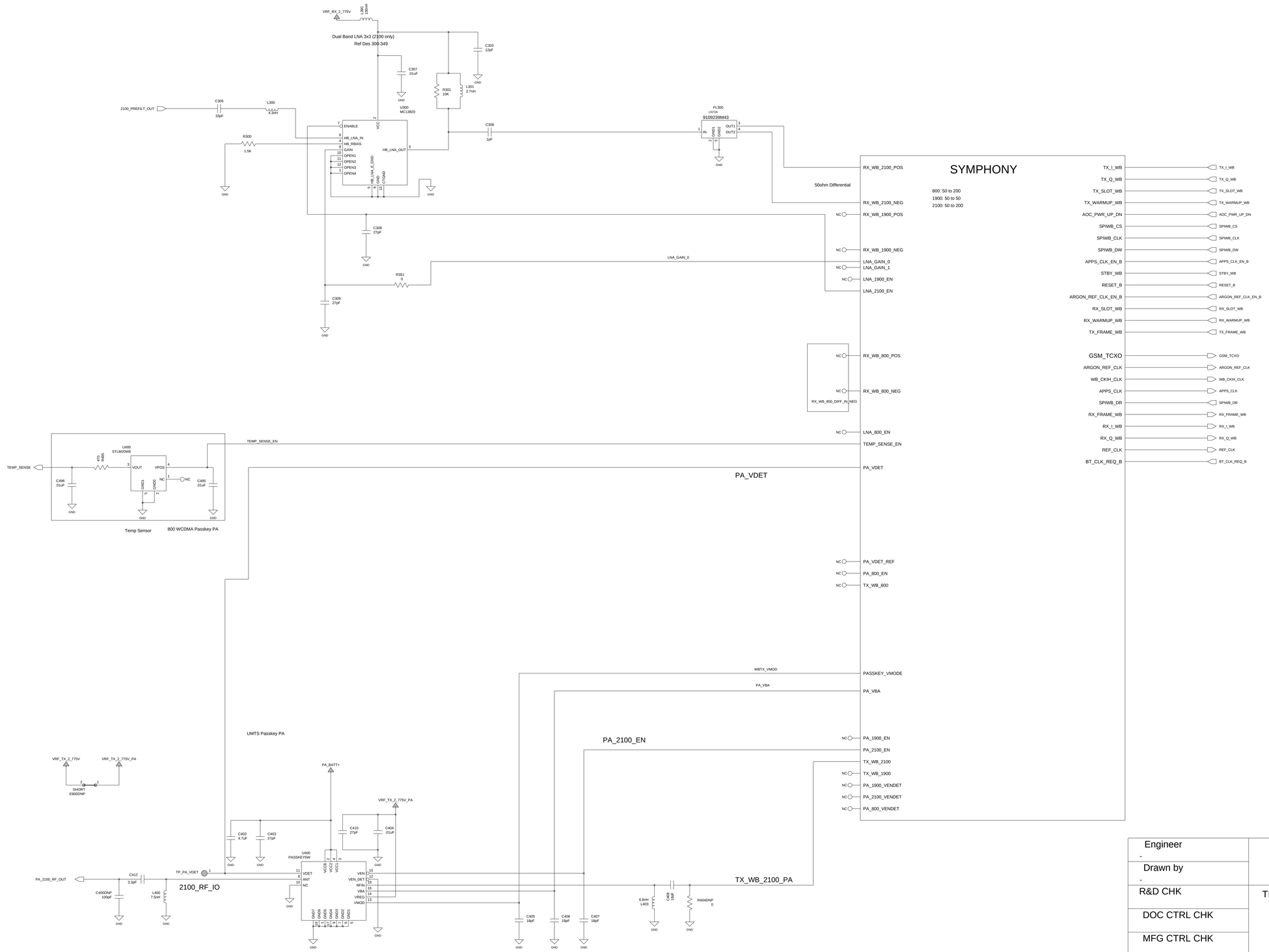


| | | | | | |
|---|---|---|---|---|---|
| Engineer - | COMPANY NAME Address City | | | | |
| Drawn by - | | | | | |
| R&D CHK | TITLE WCDMA Emerald EMEA | | | | Size D |
| DOC CTRL CHK | | | | | |
| MFG CTRL CHK | | | | | |
| Changed by QA6089 | Date Changed Tuesday, August 16, 2005 | Time 9:59:43 am | QA CHK | REV | Drawing Number | Sheet of |

MOTOROLA CONFIDENTIAL PROPRIETARY

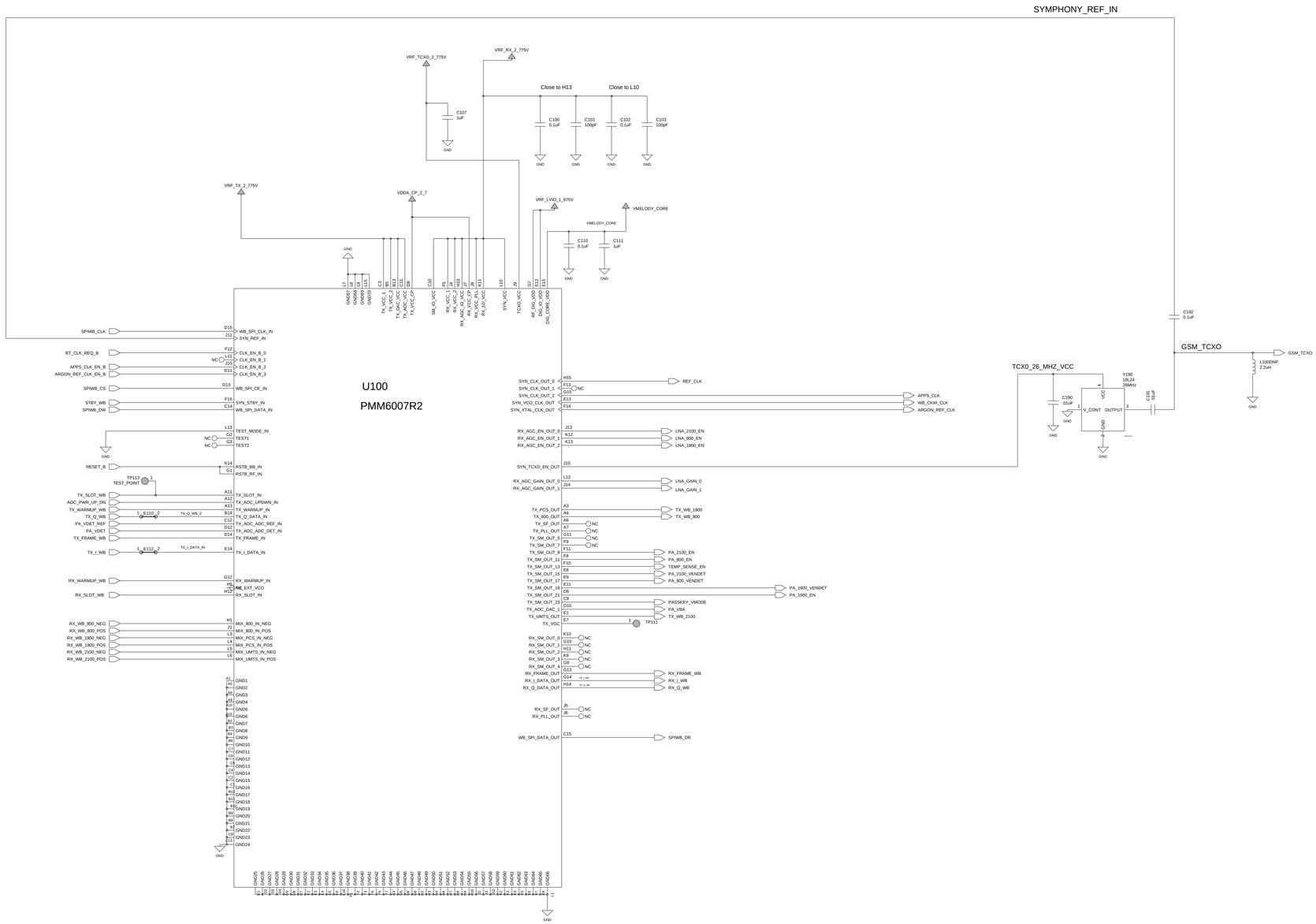


| | | | | | |
|---|---|---|---|---|---|
| Engineer<br>Matt Schneider | COMPANY NAME<br>Address<br>City | | | | |
| Drawn by<br>Matt Schneider | | | | | |
| R&D CHK | TITLE<br>SYMPHONY | | | Size<br>D | |
| DOC CTRL CHK | | | | | |
| MFG CTRL CHK | | | | | |
| MOTOROLA CONFIDENTIAL PROPRIETARY | Changed by<br>QA6089 | Date Changed<br>Friday, August 12, 2005 | Time<br>5:16:05 pm | QA CHK | REV / Drawing Number / Sheet 1 of 1 |