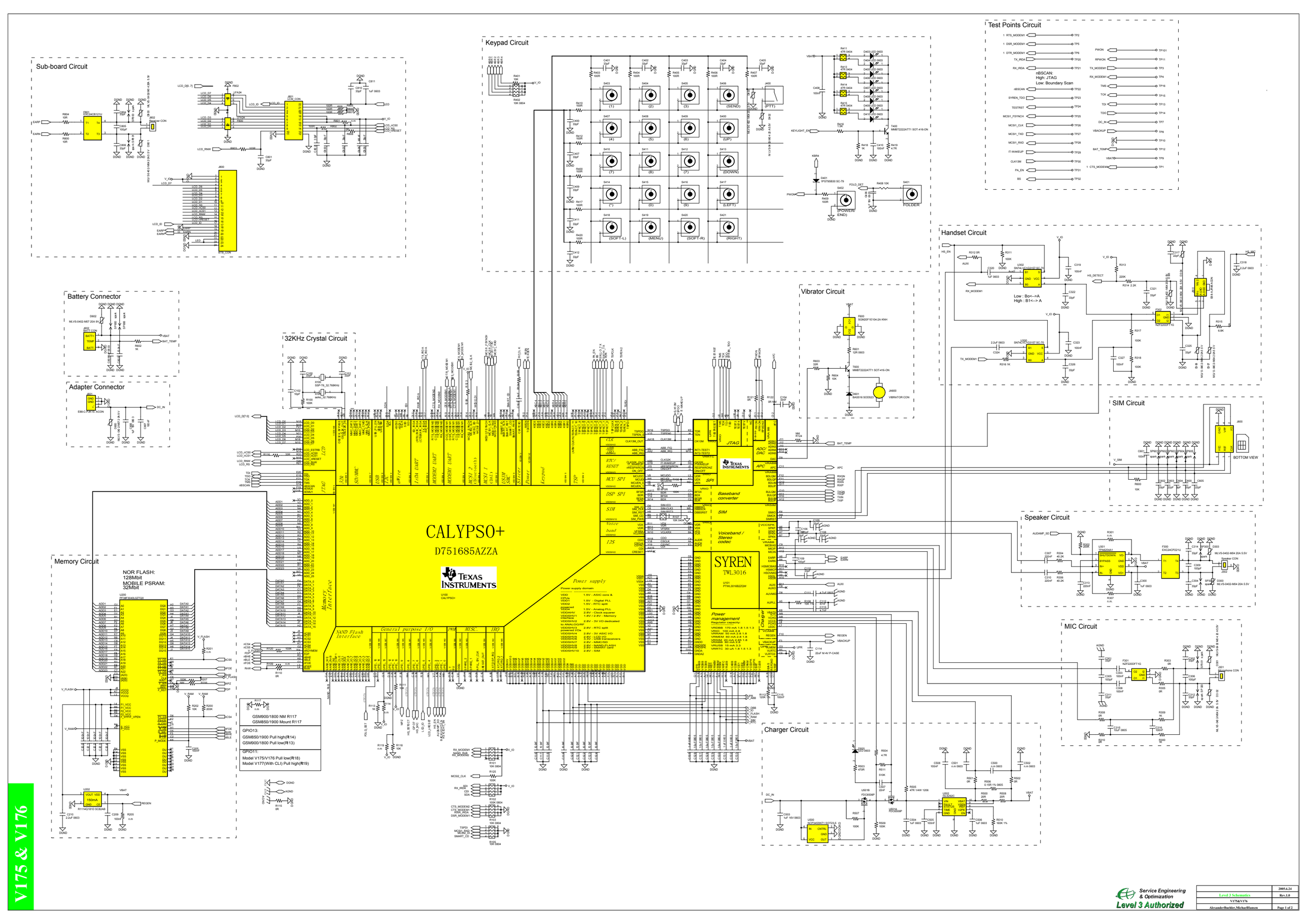
Sub-board Circuit
Keypad Circuit
Test Points Circuit
Handset Circuit
Battery Connector
Adapter Connector
32KHz Crystal Circuit
Vibrator Circuit
SIM Circuit
Speaker Circuit
Memory Circuit
MIC Circuit
Charger Circuit
CALYPSO+
D751685AZZA
TEXAS INSTRUMENTS
SYREN
TWL3016
Baseband converter
Voiceband / Stereo codec
Power management
Power supply
NAND Flash Interface
General purpose I/O
MISC.
IRQ
Memory Interface
JTAG
Keypad
Power
GSM900/1800 NM R117
GSM850/1900 Mount R117
GPIO13:
GSM850/1900 Pull high(R14)
GSM900/1800 Pull low(R13)
GPIO11:
Model V175/V176 Pull low(R18)
Model V177(With CLI) Pull high(R19)
Low : Bo<-->A
High : B1<--> A
nBSCAN:
High: JTAG
Low: Boundary Scan
BOTTOM VIEW
Service Engineering & Optimization
Level 3 Authorized
Level 3 Schematics
V175&V176
Alexander/Buehler, Michael/Hansen
2005.6.24
Rev.1.0
Page 1 of 2
V175 & V176

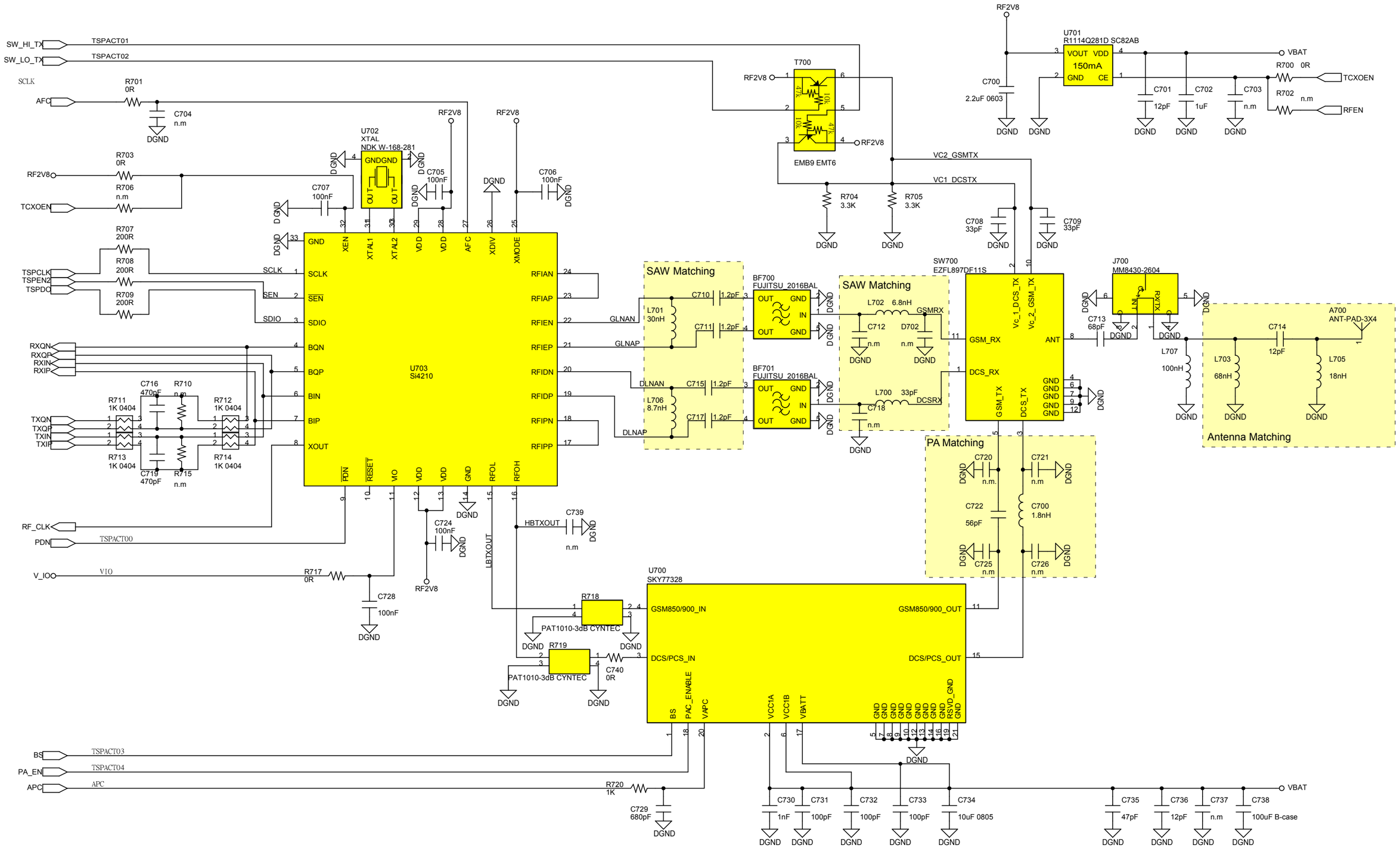

V175 & V176

Service Engineering & Optimization
Level 3 Authorized

	2005.6.24
Level 3 Schematics	Rev.1.0
V175&V176	
Alexander Buchler, Michael Hansen	Page 2 of 2