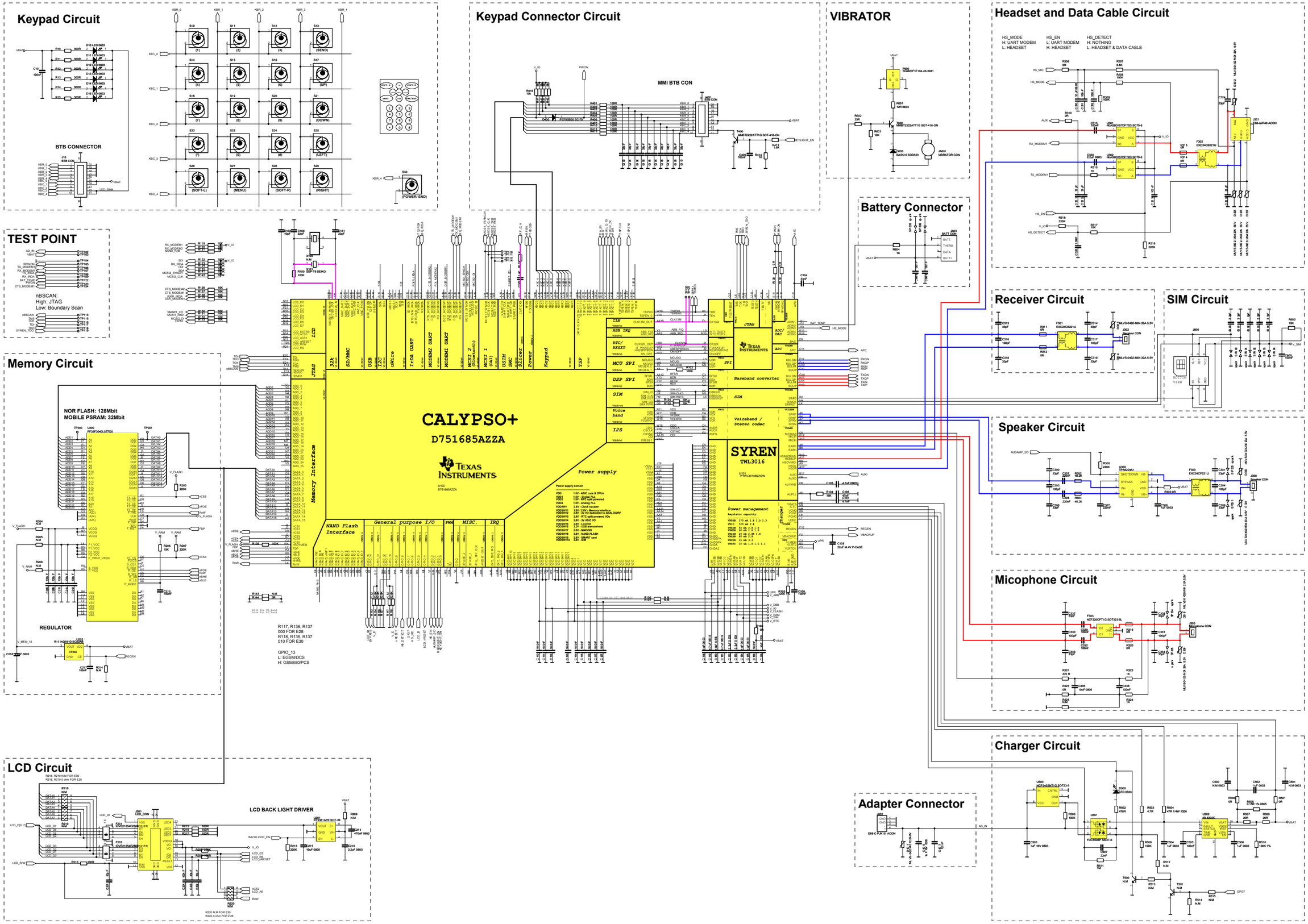

Service Engineering & Optimization
Level 3 Authorized

	2005.6.27
Level3 Schematics	Rev.1.0
C257	
Alexander Buehler, Michael Hansen	Page1of2

C257

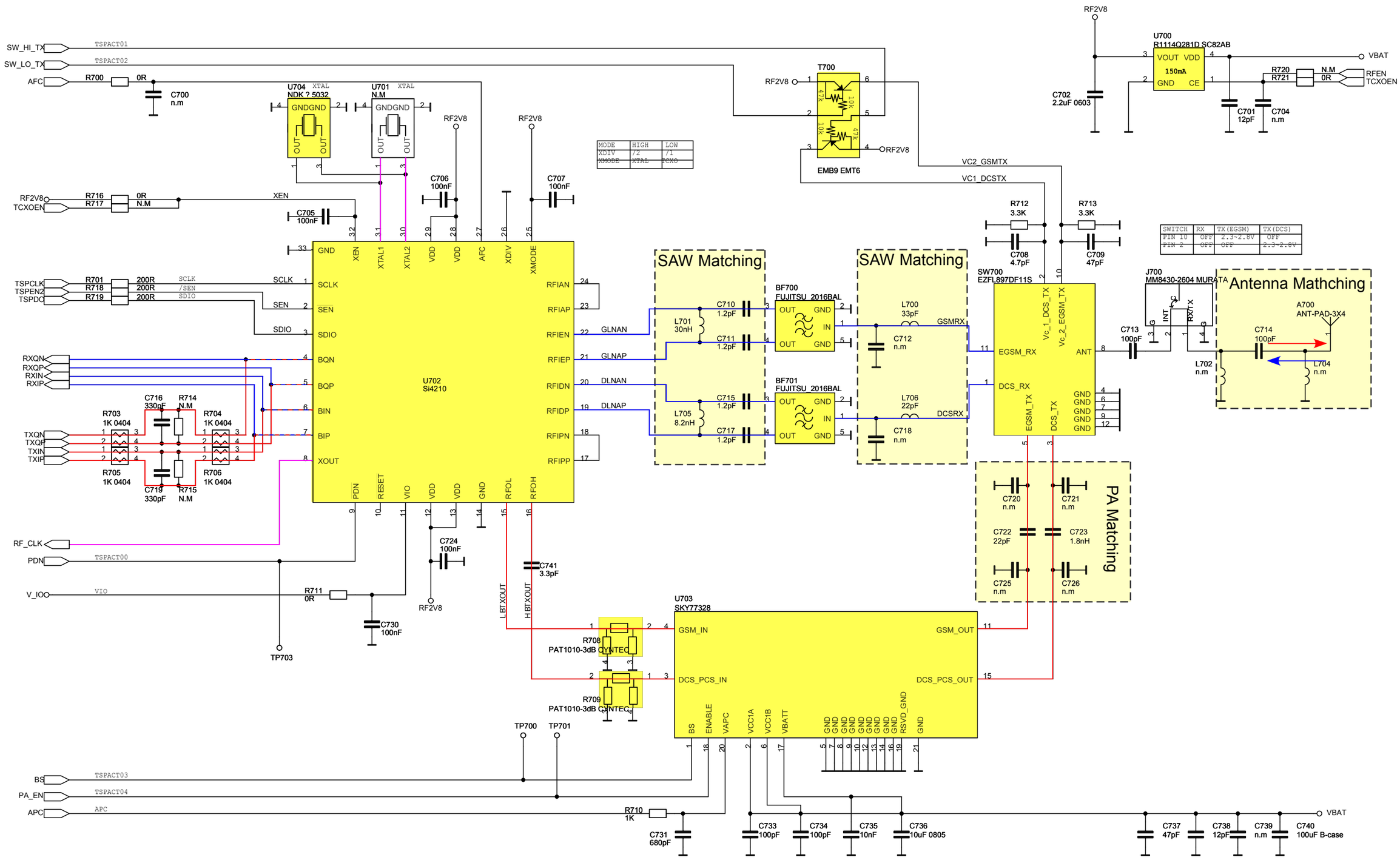

C257

Service Engineering & Optimization
Level 3 Authorized

	2005.6.27
Level3 Schematics	Rev.1.0
C257	
AlexanderBuehler,MichaelHansen	Page2of2