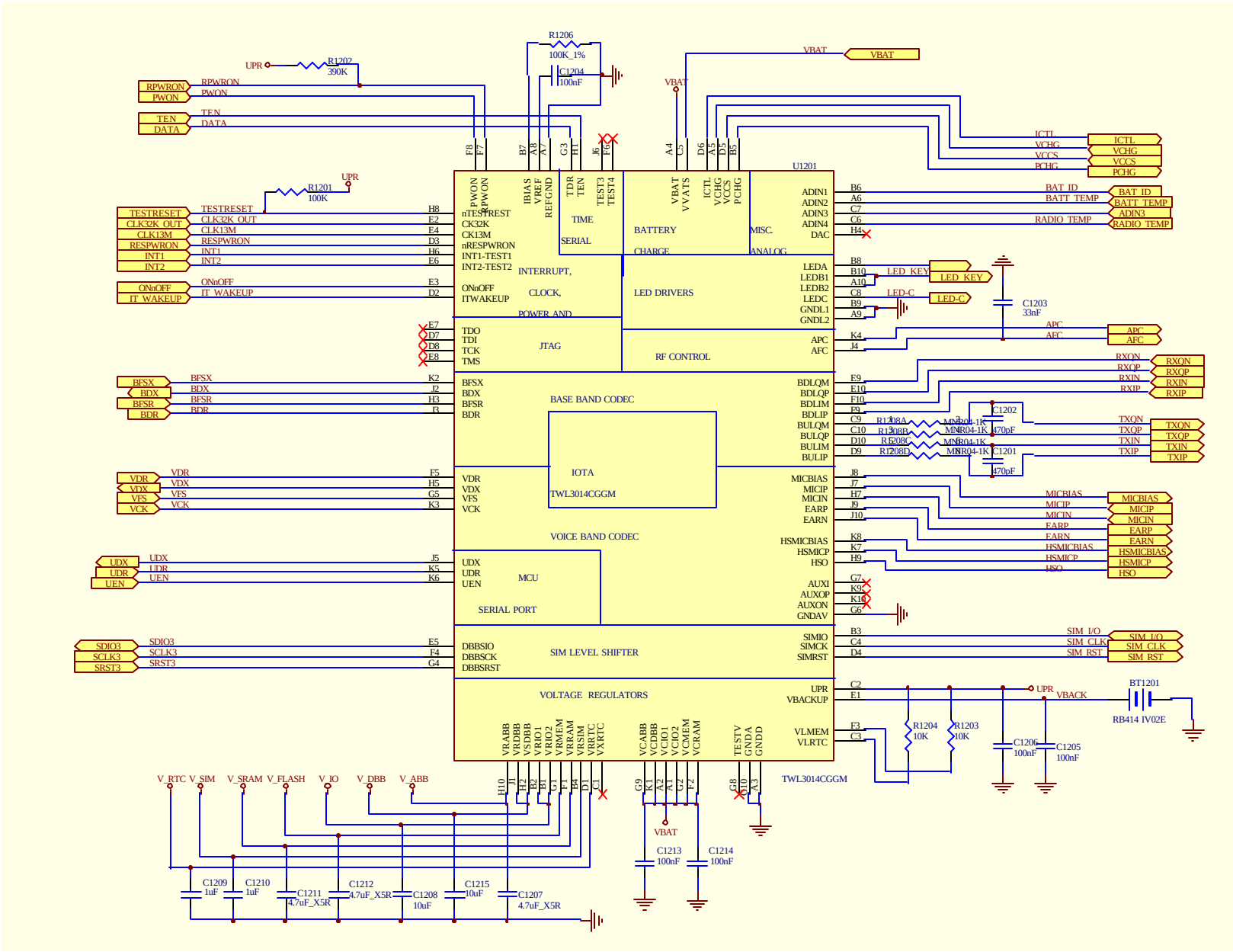
U1201
TWL3014CGGM
PWON
nTESTRESET
CK32K
CK13M
nRESPWRON
INT1-TEST1
INT2-TEST2
ONnOFF
ITWAKEUP
INTERRUPT,
CLOCK,
POWER AND
TIME
SERIAL
BATTERY
CHARGE
MISC.
ANALOG
LED DRIVERS
RF CONTROL
JTAG
TDO
TDI
TCK
TMS
BASE BAND CODEC
IOTA
VOICE BAND CODEC
MCU
SERIAL PORT
SIM LEVEL SHIFTER
VOLTAGE REGULATORS
ADIN1
ADIN2
ADIN3
ADIN4
DAC
LEDA
LEDB1
LEDB2
LEDC
GNDL1
GNDL2
APC
AFC
BDLQM
BDLQP
BDLIM
BDLIP
BULQM
BULQP
BULIM
BULIP
MICBIAS
MICIP
MICIN
EARP
EARN
HSMICBIAS
HSMICP
HSO
AUXI
AUXOP
AUXON
GNDAV
SIMIO
SIMCK
SIMRST
UPR
VBACKUP
VLMEM
VLRTC
VBAT
VVATS
ICTL
VCHG
VCCS
PCHG
TEST3
TEST4
TDR
TEN
VRABB
VRDBB
VSDBB
VRIO1
VRMEM
VRRAM
VRSIM
VRRTC
VXRTC
VCABB
VCDBB
VCIO1
VCIO2
VCMEM
VCRAM
TESTV
GNDA
GNDD
R1206
100K_1%
C1204
100nF
R1202
390K
R1201
100K
RPWRON
PWON
TEN
DATA
TESTRESET
CLK32K_OUT
CLK13M
RESPWRON
INT1
INT2
ONnOFF
IT_WAKEUP
BFSX
BDX
BFSR
BDR
VDR
VDX
VFS
VCK
UDX
UDR
UEN
SDIO3
SCLK3
SRST3
BAT_ID
BATT_TEMP
RADIO_TEMP
LED_KEY
LED-C
C1203
33nF
RXQN
RXQP
RXIN
RXIP
TXQN
TXQP
TXIN
TXIP
C1202
470pF
C1201
470pF
R1208A
R1208B
R1208C
R1208D
MNR04-1K
SIM_I/O
SIM_CLK
SIM_RST
BT1201
RB414 IV02E
VBACK
R1204
10K
R1203
10K
C1206
100nF
C1205
100nF
V_RTC
V_SIM
V_SRAM
V_FLASH
V_IO
V_DBB
V_ABB
C1209
1uF
C1210
1uF
C1211
4.7uF_X5R
C1212
4.7uF_X5R
C1208
10uF
C1215
10uF
C1207
4.7uF_X5R
C1213
100nF
C1214
100nF