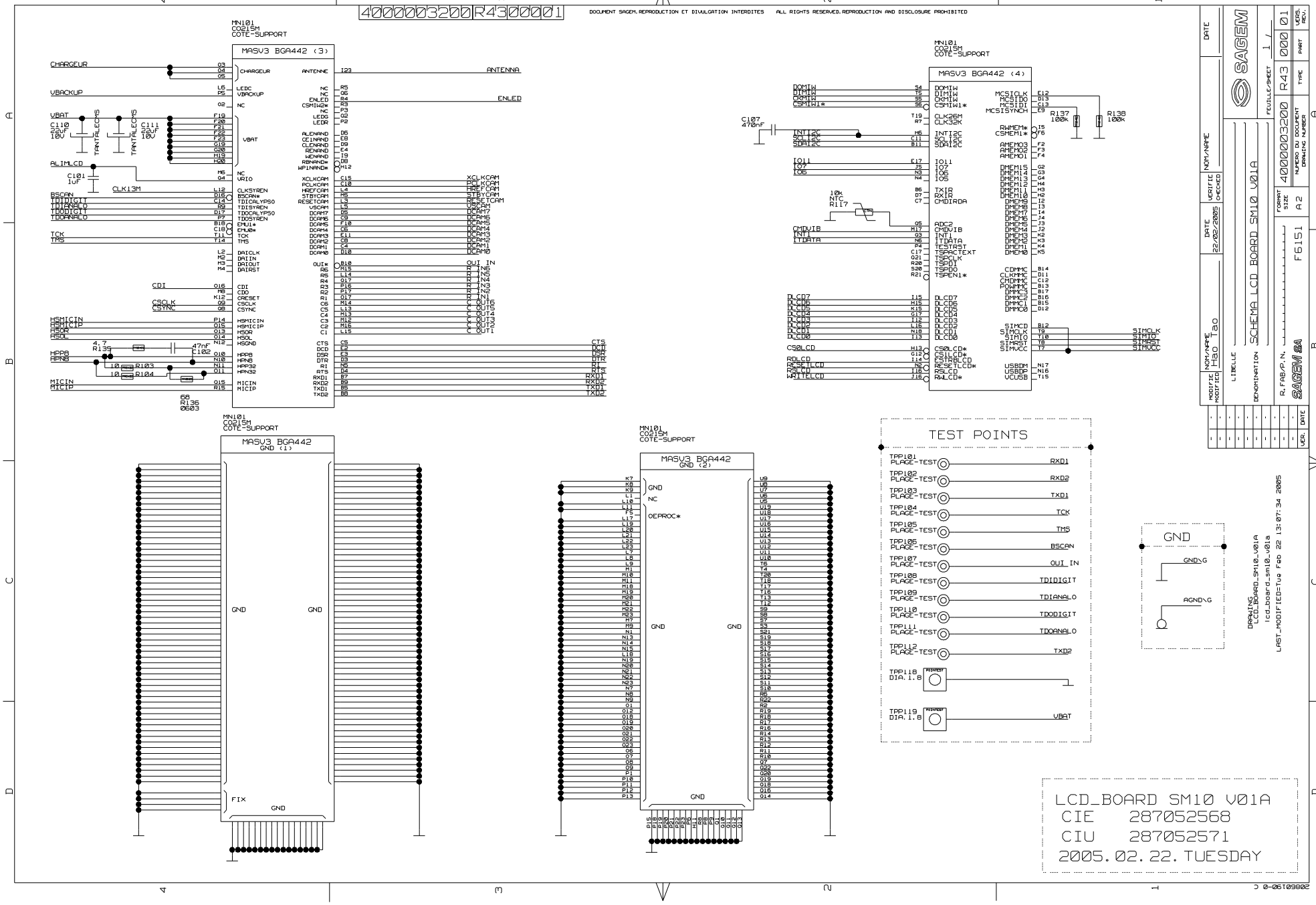
4000003200R430001
DOCUMENT SAGEM. REPRODUCTION ET DIVULGATION INTERDITES ALL RIGHTS RESERVED. REPRODUCTION AND DISCLOSURE PROHIBITED
MN101
C0215M
COTE-SUPPORT
MASV3 BGA442 (3)
MASV3 BGA442 (4)
MASV3 BGA442
GND (1)
GND (2)
CHARGEUR
VBACKUP
VBAT
ALIMLCD
CLK13M
BSCAN
TDIDIGIT
TDIANALO
TDODIGIT
TDOANALO
TCK
TMS
CDI
CSCLK
CSYNC
HSMICIN
HSMICIP
HSOR
HSOL
HPP8
HPN8
MICIN
MICIP
ANTENNA
ENLED
XCLKCAM
PCLKCAM
HREFCAM
STBYCAM
RESETCAM
VSCAM
OUT IN
CTS
DCD
DSR
DTR
RI
RTS
RXD1
RXD2
TXD1
TXD2
DOMIW
DIMIW
CKMIW
CSMIW1*
CLK26M
CLK32K
INT12C
SCL12C
SDA12C
IO11
IO7
IO6
IO5
TXIR
RXIR
CMDIRDA
ADC2
CMDVIB
INT1
ITDATA
TESTAST
TSPACTEXT
TSPCLK
TSPDI
TSPDO
TSPEN1*
DLCD7
DLCD6
DLCD5
DLCD4
DLCD3
DLCD2
DLCD1
DLCD0
CS0LCD
RDLCD
RESETLCD
RSLCD
WRITELCD
MCSICLK
MCSIDO
MCSIDI
MCSISYNCH
RWMEM*
CSMEM1*
AMEMO3
AMEMO2
AMEMO1
DMEM15
DMEM14
DMEM13
DMEM12
DMEM11
DMEM10
DMEM9
DMEM8
DMEM7
DMEM6
DMEM5
DMEM4
DMEM3
DMEM2
DMEM1
DMEM0
CDMMC
CLKMMC
CMDMMC
POWMMC
DMMC3
DMMC2
DMMC1
DMMC0
SIMCD
SIMCLK
SIMIO
SIMRST
SIMVCC
USBDM
USBDP
VCUSB
R137 100K
R138 100K
C107 470nF
10K NTC R117
C110 22UF 10V
C111 22UF 10V
TANTALECMS
C101 1UF
A.7 R135
47nF C102
R103 10
R104 10
68 R136 0603
TEST POINTS
TPP101 PLAGE-TEST RXD1
TPP102 PLAGE-TEST RXD2
TPP103 PLAGE-TEST TXD1
TPP104 PLAGE-TEST TCK
TPP105 PLAGE-TEST TMS
TPP106 PLAGE-TEST BSCAN
TPP107 PLAGE-TEST OUT IN
TPP108 PLAGE-TEST TDIDIGIT
TPP109 PLAGE-TEST TDIANALO
TPP110 PLAGE-TEST TDODIGIT
TPP111 PLAGE-TEST TDOANALO
TPP112 PLAGE-TEST TXD2
TPP118 D1A.1.8 PUSHBUTT
TPP119 D1A.1.8 PUSHBUTT VBAT
GND
GND\G
AGND\G
LCD_BOARD SM10 V01A
CIE 287052568
CIU 287052571
2005.02.22.TUESDAY
SAGEM
SCHEMA LCD BOARD SM10 V01A
4000003200 R43 000 01
F6151
A2
DRAWING
LCD_BOARD_SM10_V01A
lcd_board_sm10_v01a
LAST_MODIFIED-Tue Feb 22 13:07:34 2005

4000000320 0R430000 1 DOCUMENT SAGEM. REPRODUCTION ET DIVULGATION INTERDITES ALL RIGHTS RESERVED. REPRODUCTION AND DISCLOSURE PROHIBITED

BACKLCD DRIVER

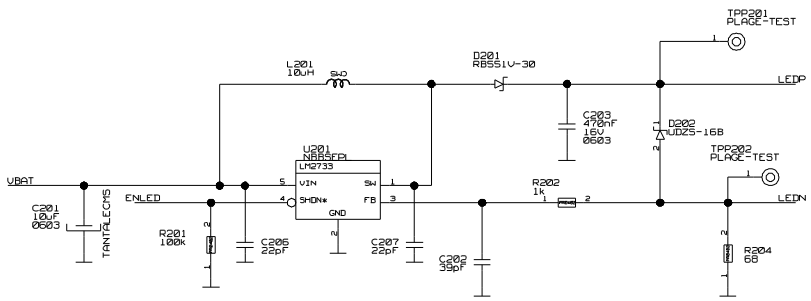

VIBRATOR BRACKET

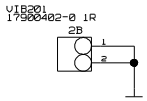

EARPHONE

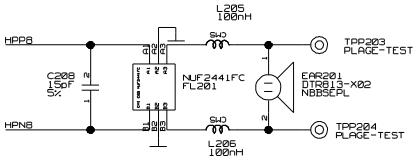

ANTENNA

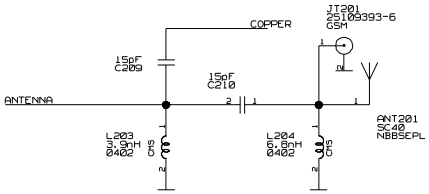

SIDEKEY FOR CAMERA

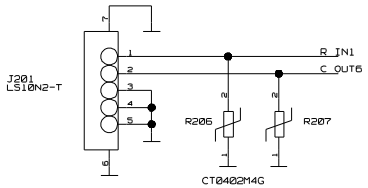

MODIFIE MODIFIED	NOM/NAME Hao Tao	DATE 22/02/2005	VERIFIE CHECKED	NOM/NAME	DATE		
LIBELLE							
DENOMINATION	SCHEMA LCD BOARD SM10 V01A						
R.FAB/P.N.	F6151	FORMAT SIZE	A2	NUMERO DU DOCUMENT DRAWING NUMBER	4000003200	TYPE	R43
	SAGEM SA			FEUILLE/SHEET	2/	PART	000
						VERS. REV.	01
VER.	DATE						

SAGEM

DRAWING
LCD_BOARD_SM10_V01A
lcd_board_sm10_v01a
LAST_MODIFIED=Wed Feb 23 08:48:31 2005

0-06109902

DOCUMENT SAGEM. REPRODUCTION ET DIVULGATION INTERDITES ALL RIGHTS RESERVED. REPRODUCTION AND DISCLOSURE PROHIBITED

4000003200R430001

MELODY CHIP CIRCUIT

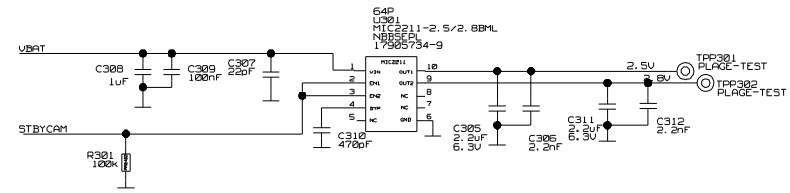

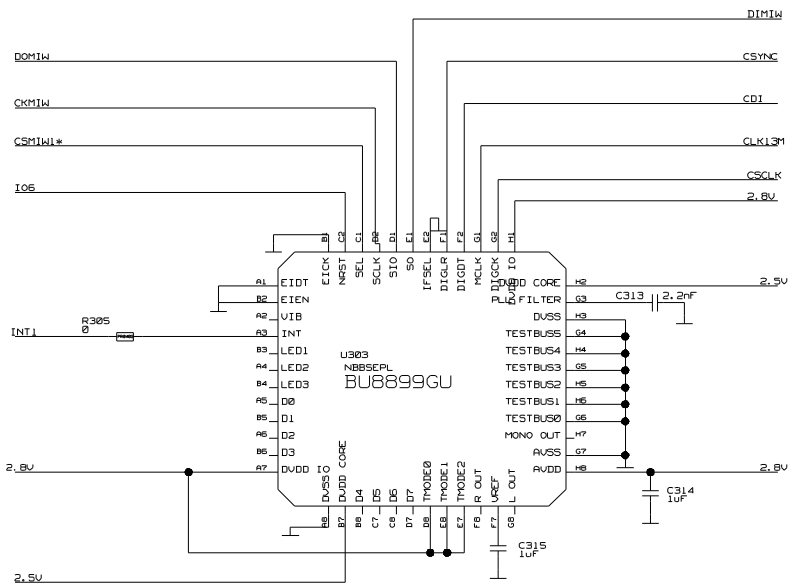

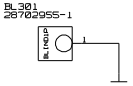

DRAWING
LCD_BOARD_SM10_V01A
lcd_board_sm10_v01a
LAST_MODIFIED=Tue Feb 22 13:04:09 2005

MODIFIE MODIFIED	NOM/NAME Hao Tao	DATE 22/02/2005	VERIFIE CHECKED
LIBELLE			NOM/NAME
DENOMINATION	SCHEMA LCD BOARD SM10 V01A		
R.FAB/P.N.	F6151	FORMAT SIZE	A2
SAGEM SA		NUMERO DU DOCUMENT DRAWING NUMBER	4000003200
		TYPE	R43
		FEUILLE/SHEET	3/
		PART	000
		VERS. REV.	01
VER.	DATE		

SAGEM

0-06109002

4000003200R430001 DOCUMENT SAGEM. REPRODUCTION ET DIVULGATION INTERDITES ALL RIGHTS RESERVED. REPRODUCTION AND DISCLOSURE PROHIBITED

CAMERA CONNECTOR CIRCUIT

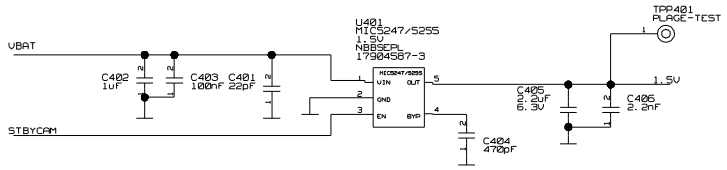

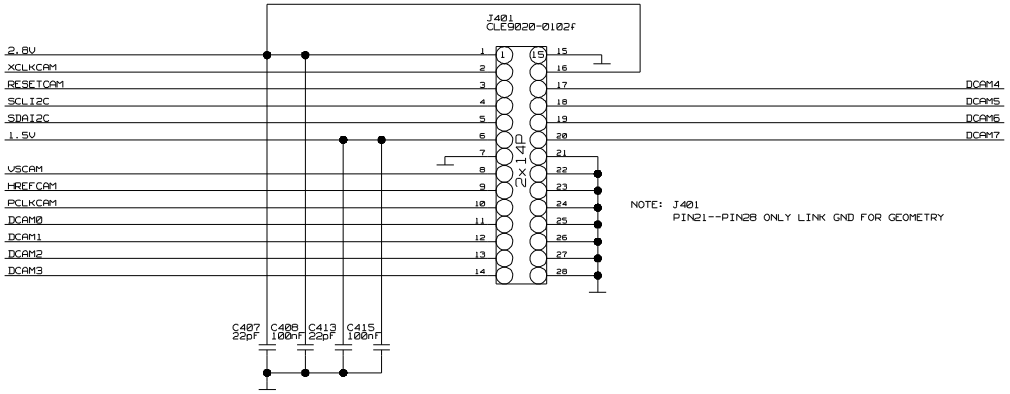

NOTE: J401
PIN21--PIN28 ONLY LINK GND FOR GEOMETRY

DRAWING
LCD_BOARD_SM10_V01A
lcd_board_sm10_v01a
LAST_MODIFIED=Tue Feb 22 13:04:22 2005

MODIFIE MODIFIED	NOM/NAME Hao Tao	DATE 22/02/2005	VERIFIE CHECKED
LIBELLE	SCHEMA LCD BOARD SM10 V01A		NOM/NAME
DENOMINATION			DATE
R.FAB/P.N.	SAGEM SA	FORMAT SIZE A2	NUMERO DU DOCUMENT DRAWING NUMBER 4000003200
	F6151		FEUILLE/SHEET 4/
			SAGEM
			TYPE R43
			PART 000
			VERS. REV. 01
VER.	DATE		

J 0-06109002

DOCUMENT SAGEM. REPRODUCTION ET DIVULGATION INTERDITES ALL RIGHTS RESERVED. REPRODUCTION AND DISCLOSURE PROHIBITED

HEADSET REMOTE BUTTON

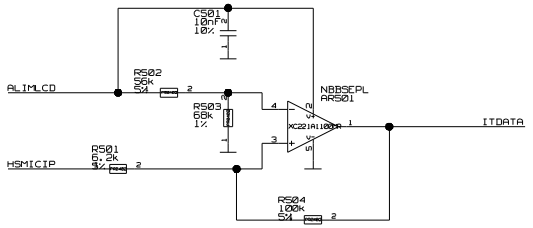

VIBRATOR

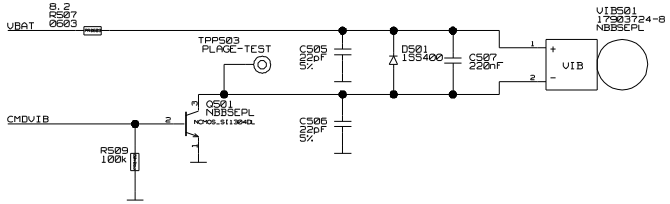

BTB CONNECTOR & LCD CONNECTOR

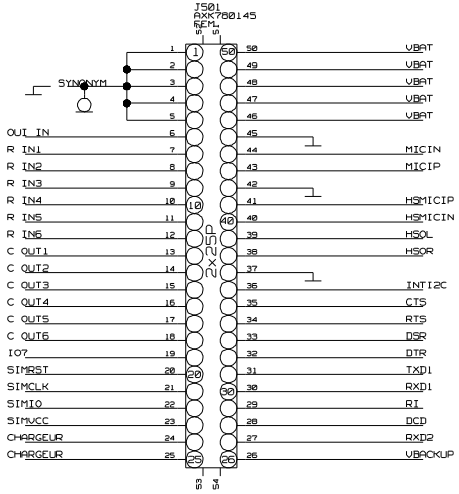

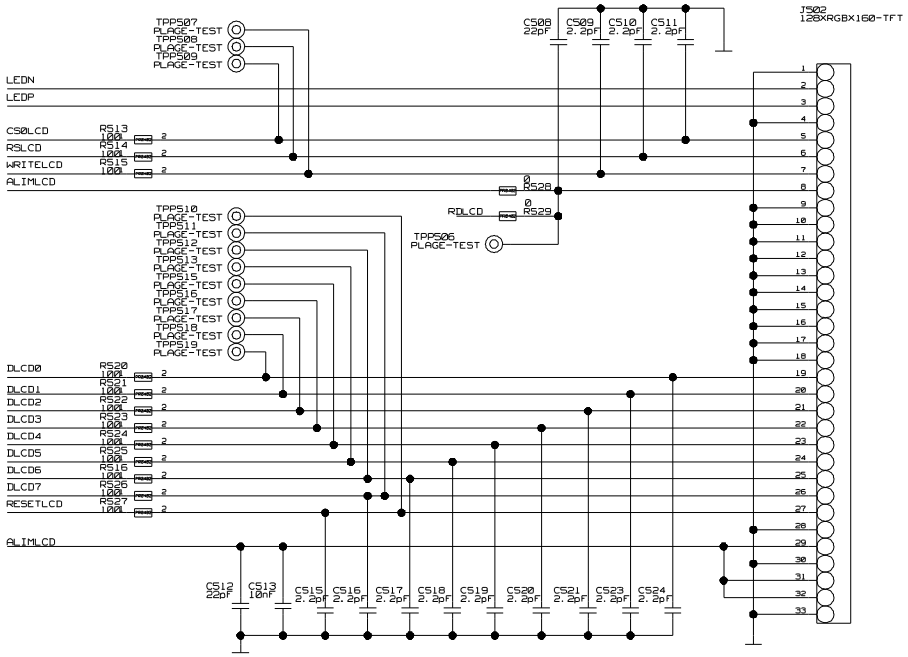

MODIFIE MODIFIED	NOM/NAME Hao Tao	DATE 22/02/2005	VERIFIE CHECKED
LIBELLE			NOM/NAME
DENOMINATION	SCHEMA LCD BOARD SM10 V01A		DATE
R.FAB/P.N.	SAGEM SA	F6151	FORMAT SIZE A2
NUMERO DU DOCUMENT DRAWING NUMBER	4000003200	R43	000
FEUILLE/SHEET	5/	TYPE	PART
			VERS. REV. 01

DRAWING
LCD_BOARD_SM10_V01A
lcd_board_sm10_v01a
LAST_MODIFIED=Tue Feb 22 13:04:35 2005

0-06109002

4000003200R430001

DOCUMENT SAGEM. REPRODUCTION ET DIVULGATION INTERDITES ALL RIGHTS RESERVED. REPRODUCTION AND DISCLOSURE PROHIBITED

```
*** Signal Cross-Reference ***
   --- for the entire design --

1.5V            4B2<> 4C4<>
2.6V            3B2<> 3C2<> 3D3<>
2.8V            3B2<> 3C2<> 3D2<> 3D3<> 4C4<>
AGND            1C1>
ALIMLCD         1A4<> 5A4<> 5C3<> 5D3<>
ANTENNA         1A3<> 2D3<>
BSCAN           1A4<> 1C1>
C OUT1          1B3<> 5C4<>
C OUT2          1B3<> 5C4<>
C OUT3          1B3<> 5C4<>
C OUT4          1B3<> 5C4<>
C OUT5          1B3<> 5C4<>
C OUT6          1B3<> 2C1<> 5C4<>
CDI             1B4<> 3B2<>
CHARGEUR        1A4<> 5D4<>
CKMIW           1A2<> 3B3<>
CLK13M          1A4<> 3C2<>
CMDVIB          1A2<> 5B3<>
COPPER          2C2<>
CS0LCD          1B2<> 5C3<>
CSCLK           1B4<> 3C2<>
CSMIW1 *        1A2<> 3C3<>
CSYNC           1B4<> 3B2<>
CTS             1B3<> 5C3<>
DCAM0           1B3<> 4C4<>
DCAM1           1B3<> 4C4<>
DCAM2           1B3<> 4D4<>
DCAM3           1B3<> 4D4<>
DCAM4           1A3<> 4C2<>
DCAM5           1A3<> 4C2<>
DCAM6           1A3<> 4C2<>
DCAM7           1A3<> 4C2<>
DCD             1B3<> 5D3<>
DIMIW           1A2<> 3B2<>
DLCD0           1B2<> 5C3<>
DLCD1           1B2<> 5C3<>
DLCD2           1B2<> 5C3<>
DLCD3           1B2<> 5D3<>
DLCD4           1B2<> 5D3<>
DLCD5           1B2<> 5D3<>
DLCD6           1B2<> 5D3<>
DLCD7           1B2<> 5D3<>
DOMIW           1A2<> 3B3<>
DSR             1B3<> 5C3<>
DTR             1B3<> 5C3<>
ENLED           1A3<> 2B4<>
HPNB            1B4<> 2D4<>
HPPB            1B4<> 2C4<>
HREFCAM         1A3<> 4C4<>
HSMICIN         1B4<> 5C3<>
HSMICIP         1B4<> 5B4<> 5C3<>
HSOL            1B4<> 5C3<>
HSOR            1B4<> 5C3<>
INT1            1B2<> 3C3<>
INTI2C          1A2<> 5C3<>
IO6             1A2<> 3C3<>
IO7             1A2<> 5C4<>
IO11            1A2<>
ITDATA          1B2<> 5A3<>
LEDN            2B2<> 5B3<>
LEDP            2B2<> 5C3<>
MICIN           1B4<> 5C3<>
MICIP           1B4<> 5C3<>
OUI IN          1B3<> 1C1> 5C4<>
PCLKCAM         1A3<> 4C4<>
R IN1           1B3<> 2C1<> 5C4<>
R IN2           1B3<> 5C4<>
R IN3           1B3<> 5C4<>
R IN4           1B3<> 5C4<>
R IN5           1B3<> 5C4<>
R IN6           1B3<> 5C4<>
RDLCD           1B2<> 5C2<>
RESETCAM        1A3<> 4C4<>
RESETLCD        1B2<> 5D3<>
RI              1B3<> 5D3<>
RSLCD           1B2<> 5C3<>
RTS             1B3<> 5C3<>
RXD1            1B1> 1B3<> 5D3<>
RXD2            1B3<> 1C1> 5D3<>
SCLI2C          1A2<> 4C4<>
SDAI2C          1A2<> 4C4<>
SIMCLK          1B1<> 5D4<>
SIMIO           1B1<> 5D4<>
SIMRST          1B1<> 5D4<>
SIMVCC          1B1<> 5D4<>
STBYCAM         1A3<> 3B3<> 4B3<>
TCK             1B4<> 1C1>
TDIANALO        1A4<> 1C1>
TDIDIGIT        1A4<> 1C1>
TDOANALO        1A4<> 1C1>
TDODIGIT        1A4<> 1C1>
TMS             1B4<> 1C1>
TXD1            1B3<> 1C1> 5D3<>
TXD2            1B3<> 1C1>
VBACKUP         1A4<> 5D3<>
VBAT            1A4<> 1D1<> 2B4<> 3A3<> 4B3<> 5A3<>
                5C3<>
VSCAM           1A3<> 4C4<>
WRITELCD        1B2<> 5C3<>
XCLKCAM         1A3<> 4C4<>
```

MODIFIE MODIFIED	NOM/NAME Hao Tao	DATE 22/02/2005	VERIFIE CHECKED
NOM/NAME		DATE	

SAGEM

LIBELLE

DENOMINATION SCHEMA LCD BOARD SM10 V01A

FEUILLE/SHEET /

R.FAB/P.N.	FORMAT SIZE	NUMERO DU DOCUMENT DRAWING NUMBER	TYPE	PART	VERS. REV.
SAGEM SA F6151	A2	4000003200	R43	000	01

VER.	DATE

0-06109002

4000003200R430001

DOCUMENT SAGEM. REPRODUCTION ET DIVULGATION INTERDITES ALL RIGHTS RESERVED. REPRODUCTION AND DISCLOSURE PROHIBITED

```
      *** Unit Cross-Reference ***
        --- for the entire design --

ANT201 ANTENCERAM 2D2
AR501 ARPSOT26  5A4
BL301 BLINDIP   3C2
C101  PC0402    1A4
C102  PC0402    1B4
C107  PC0402    1A2
C110  TANTALECMS 1A4
C111  TANTALECMS 1A4
C201  TANTALECMS 2B4
C202  PC0402    2B3
C203  PC0603XSR 2B3
C206  PC0402    2B4
C207  PC0402    2B3
C208  PC0402    2D4
C209  PC0402    2C3
C210  PC0402    2D3
C305  PC0603XSR 3B3
C306  PC0402    3B2
C307  PC0402    3B3
C308  PC0402    3B3
C309  PC0402    3B3
C310  PC0402    3B3
C311  PC0603XSR 3B2
C312  PC0402    3B2
C313  PC0402    3C2
C314  PC0402    3D2
C315  PC0402    3D2
C401  PC0402    4B3
C402  PC0402    4B3
C403  PC0402    4B3
C404  PC0402    4B2
C405  PC0603XSR 4B2
C406  PC0402    4B2
C407  PC0402    4D3
C408  PC0402    4D3
C413  PC0402    4D3
C415  PC0402    4D3
C501  PC0402    5A4
C506  PC0402    5A2
C505  PC0402    5B2
C507  PC0402    5A2
C508  PC0402    5B2
C509  PC0402    5B2
C510  PC0402    5B2
C511  PC0402    5B1
C512  PC0402    5D2
C513  PC0402    5D2
C515  PC0402    5D2
C516  PC0402    5D2
C517  PC0402    5D2
C518  PC0402    5D2
C519  PC0402    5D2
C520  PC0402    5D2
C521  PC0402    5D2
C523  PC0402    5D2
C524  PC0402    5D2
D201  SCHOTTKY  2A3
D202  ZENER     2B3
D501  DIODE     5A2
EAR201 ECOUTEUR  2D4
FL201 EMICSDNUF2441FC 2D4
J201  CONNSRFS 2D2
J401  CONN2X14P 4C3
J501  CONN2X25P4F 5B4
J502  CONN33FS  5B1
JT201 TSTCOPAS  2C2
L201  SELFCMS   2A4
L203  SELFCMS   2D3
L204  SELFCMS   2D2
L205  SELFCMS   2C4
L206  SELFCMS   2D4
MN101 MASV3BGA442 1A2 1A4 1B3 1B4
Q501  BIPNPSOT23 5B2
R103  PR0402    1B4
R104  PR0402    1B4
R117  CTN       1A2
R135  PR0402    1B4
R136  PR0603    1B4
R137  PR0402    1A1
R138  PR0402    1A1
R201  PR0402    2B4
R202  PR0402    2B3
R204  PR0402    2B3
R205  VARISTANCE 2D1
R207  VARISTANCE 2D1
R301  PR0402    3B3
R305  PR0402    3C3
R501  PR0402    5B4
R502  PR0402    5A4
R503  PR0402    5A4
R504  PR0402    5B4
R507  PR0603    5A2
R509  PR0402    5B2
R513  PR0402    5C3
R514  PR0402    5C3
R515  PR0402    5C3
R516  PR0402    5D3
R520  PR0402    5C3
R521  PR0402    5C3
R522  PR0402    5C3
R523  PR0402    5C3
R524  PR0402    5D3
R525  PR0402    5D3
R526  PR0402    5D3
R527  PR0402    5D3
R528  PR0402    5C2
R529  PR0402    5C2
TPP101 PLOT      1B2
TPP102 PLOT      1C2
TPP103 PLOT      1C2
TPP104 PLOT      1C2
TPP105 PLOT      1C2
TPP106 PLOT      1C2
TPP107 PLOT      1C2
TPP108 PLOT      1C2
TPP109 PLOT      1C2
TPP110 PLOT      1C2
```

```
TPP111 PLOT      1C2
TPP112 PLOT      1C2
TPP118 POINTEST  1C2
TPP119 POINTEST  1D2
TPP201 PLOT      2A3
TPP202 PLOT      2B3
TPP203 PLOT      2C3
TPP204 PLOT      2D3
TPP301 PLOT      3A2
TPP302 PLOT      3B2
TPP401 PLOT      4B2
TPP503 PLOT      5A2
TPP506 PLOT      5C2
TPP507 PLOT      5B2
TPP508 PLOT      5B2
TPP509 PLOT      5B2
TPP510 PLOT      5C2
TPP511 PLOT      5C2
TPP512 PLOT      5C2
TPP513 PLOT      5C2
TPP515 PLOT      5C2
TPP516 PLOT      5C2
TPP517 PLOT      5C2
TPP518 PLOT      5C2
TPP519 PLOT      5C2
U201  CONVSOT235 2B3
U301  MIC2211    3A3
U303  BL8899GJ   3C3
U401  MICSOT235  4B3
VIB201 CONN2PS   2B2
VIB501 VIBREUR   5A1
```

MODIFIE MODIFIED	NOM/NAME Hao Tao	DATE 22/02/2005	VERIFIE CHECKED
			NOM/NAME
			DATE

LIBELLE

DENOMINATION SCHEMA LCD BOARD SM10 V01A

R.FAB/P.N. F6151

SAGEM SA

SAGEM

FEUILLE/SHEET /

NUMERO DU DOCUMENT DRAWING NUMBER 4000003200

TYPE R43

PART 000

VERS. REV. 01

FORMAT SIZE A2

VER.	DATE

0-06109002

DOCUMENT SAGEM. REPRODUCTION ET DIVULGATION INTERDITES ALL RIGHTS RESERVED. REPRODUCTION AND DISCLOSURE PROHIBITED

4000002911 R43000001

KEY_BOARD SM10 V01
CIE 287050142
CIU 287050155
2004.12.31 FRIDAY

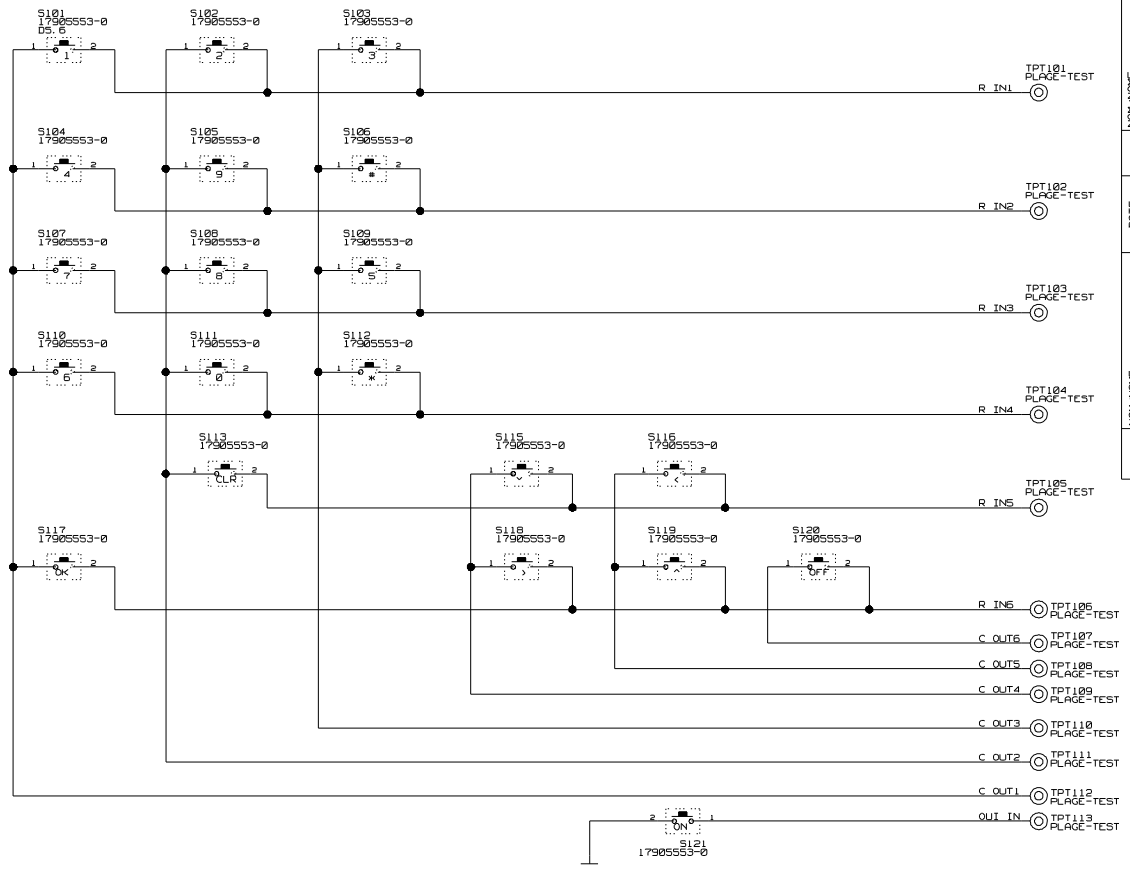

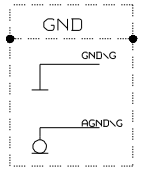

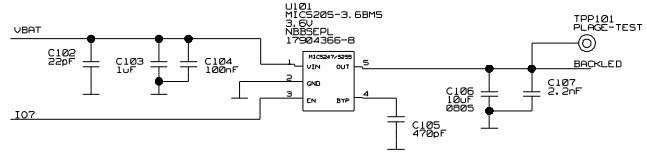

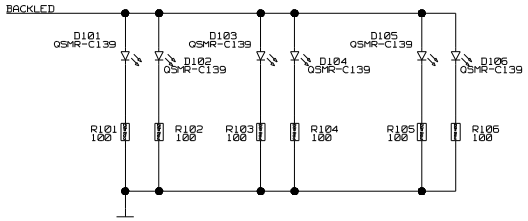

MODIFIE MODIFIED	NOM/NAME Hao Tao	DATE 30/12/2004	VERIFIE CHECKED NOM/NAME
LIBELLE			DATE
DENOMINATION	SCHEMA KEYPAD BOARD SM10 V01		
R.FAB/P.N.	F6151	FORMAT SIZE A2	NUMERO DU DOCUMENT DRAWING NUMBER 4000002911
SAGEM SA			TYPE R43
			FEUILLE/SHEET 1 / 1
			PART 000
			VERS. REV. 01
UCR	DATE		

SAGEM

DRAWING KEYPAD_BOARD_SM10_V01
keypad_board_sm10_v01
LAST_MODIFIED=Thu Dec 30 15:53:15 2004

0-06109002

DOCUMENT SAGEM. REPRODUCTION ET DIVULGATION INTERDITES ALL RIGHTS RESERVED. REPRODUCTION AND DISCLOSURE PROHIBITED

SIM

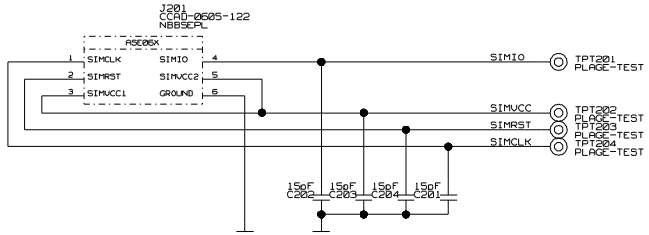

BATTERY CONNECTOR

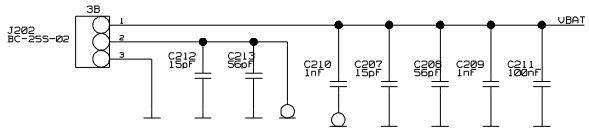

BACKUP BATTERY

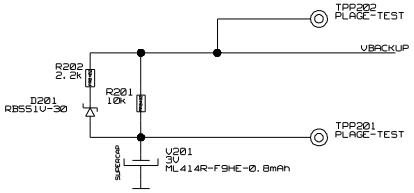

BTB CONNECTOR

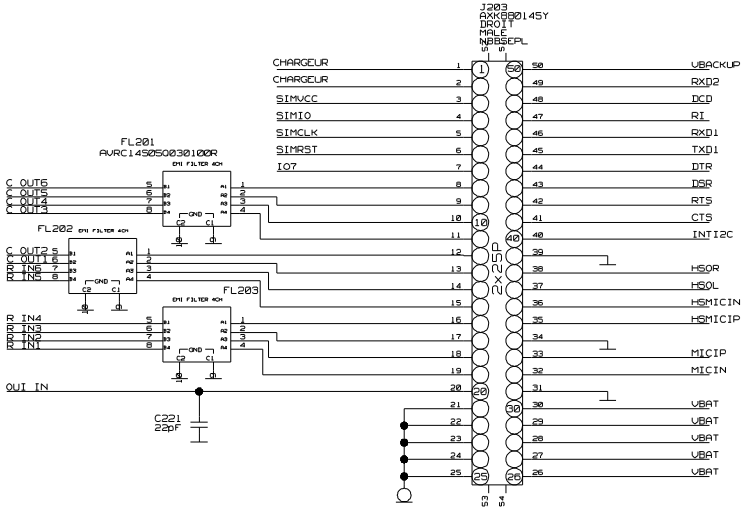

MODIFIE MODIFIED	NOM/NAME Hao Tao	DATE 30/12/2004	VERIFIE CHECKED
LIBELLE			
DENOMINATION	SCHEMA KEYPAD BOARD SM10 V01		
R.FAB/P.N.	F6151		
SAGEM SA			

SAGEM

FEUILLE/SHEET	2/		
NUMERO DU DOCUMENT DRAWING NUMBER	4000002911	TYPE R43	PART 000
FORMAT SIZE	A2		

DATE | VERS. REV. 01

DRAWING
KEYPAD_BOARD_SM10_V01
keypad_board_sm10_v01
LAST_MODIFIED=Wed Jan 5 17:17:04 2005

0-06109002

DOCUMENT SAGEM. REPRODUCTION ET DIVULGATION INTERDITES ALL RIGHTS RESERVED. REPRODUCTION AND DISCLOSURE PROHIBITED

4000002911 R43 00001

MICROPHONE

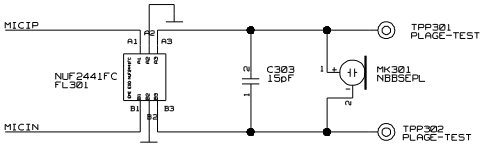

I/O CONNECTOR

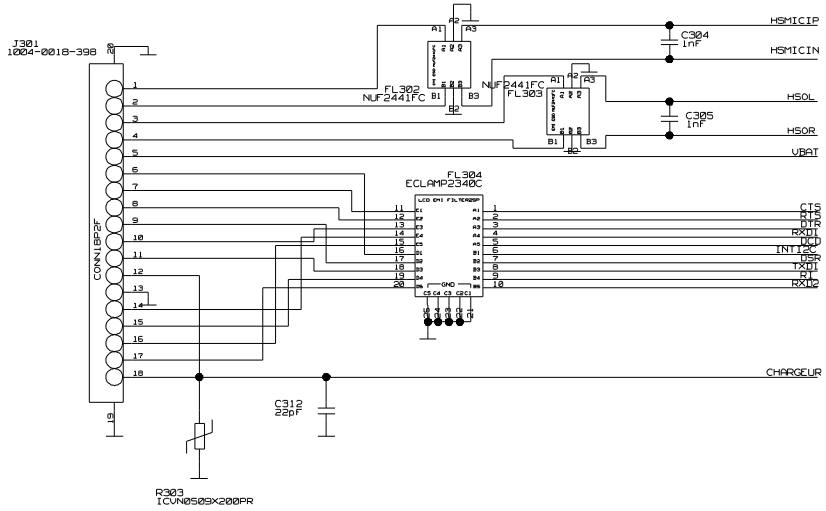

MODIFIE MODIFIED	NOM/NAME Hao Tao	DATE 30/12/2004	VERIFIE CHECKED
NOM/NAME	DATE		

LIBELLE

DENOMINATION SCHEMA KEYPAD BOARD SM10 V01

R.FAB/P.N. F6151

SAGEM SA

FORMAT SIZE A2

NUMERO DU DOCUMENT DRAWING NUMBER 4000002911

TYPE R43

PART 000

VERS. REV. 01

FEUILLE/SHEET 3/

SAGEM

DRAWING KEYPAD_BOARD_SM10_V01

keypad_board_sm10_v01

LAST_MODIFIED=Thu Dec 30 15:33:03 2004

VER. DATE

0-06109002