U1100_MT6225

U1200_AUDIOKEYPAD

U1300_MMCFLASHIO

U1400_PMIC

U1500_JPEG

U2100_RF

LCD Interface

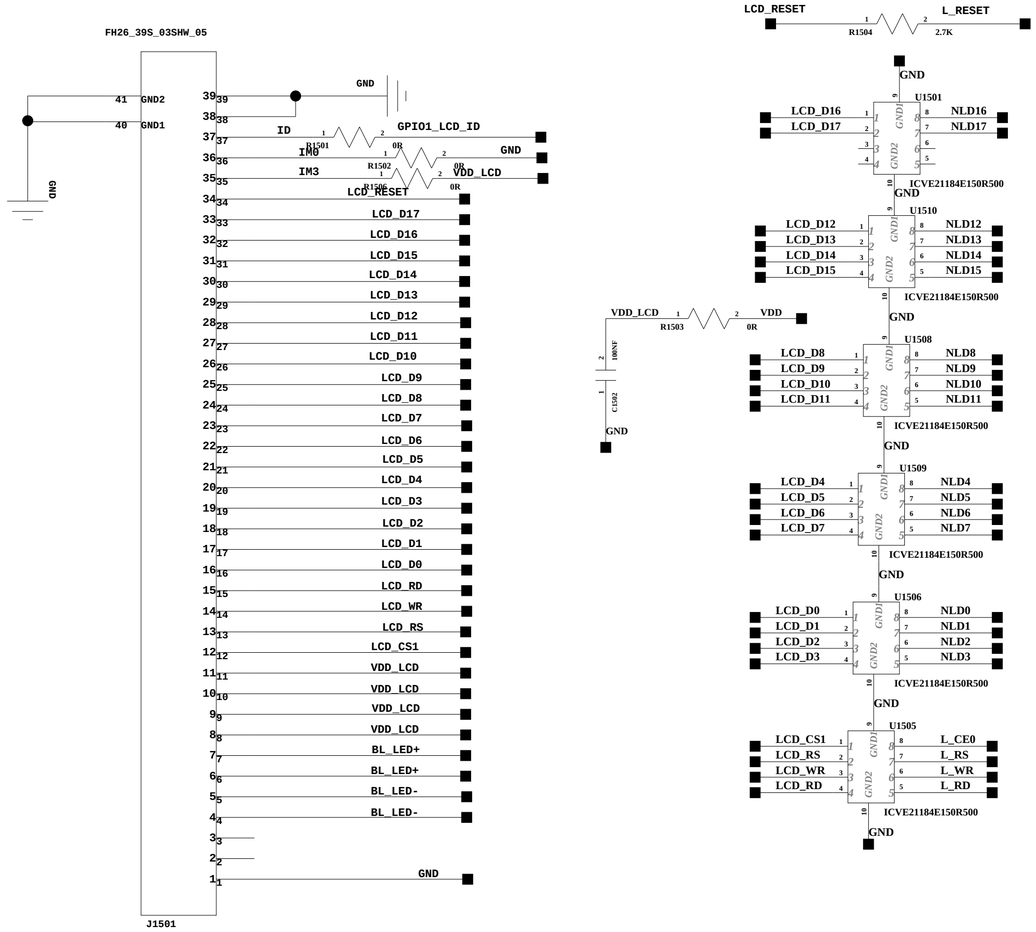

Camera Interface

(Note : Standard camera interface)

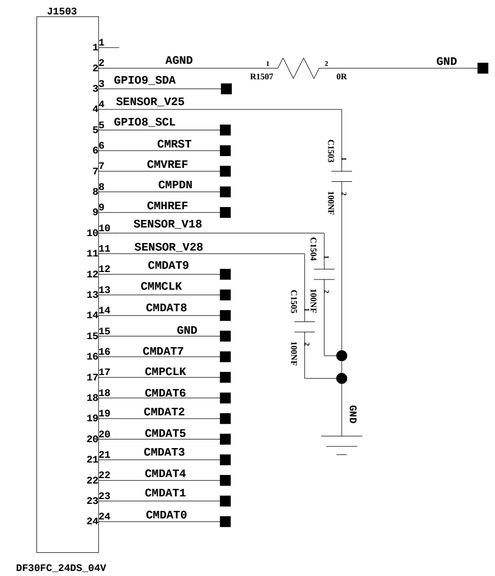

Camera Power Supply

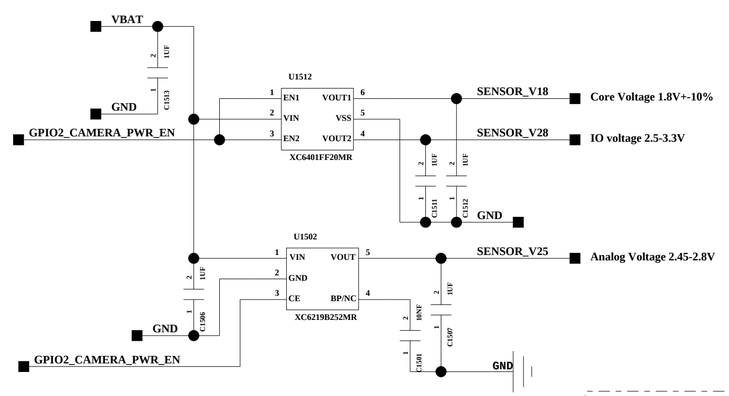

LCD BackLight

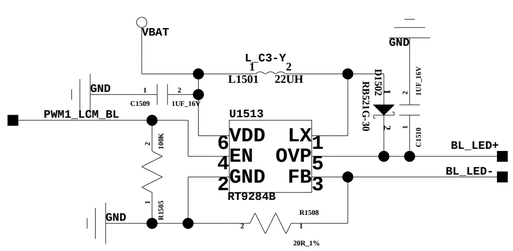

Page - 6 : LCM/Sensor Interface

Project Name : Voile2

Revision : Voile2_MB_H101

Designer : Yangwla

Date : 2007-03

MIC

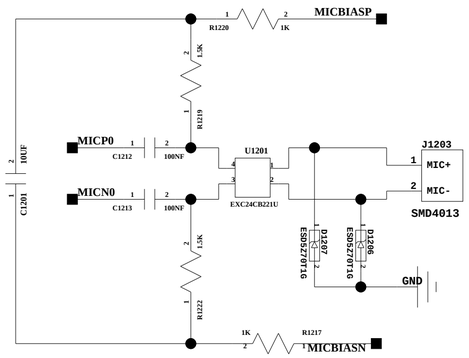

HeadSet Audio Interface

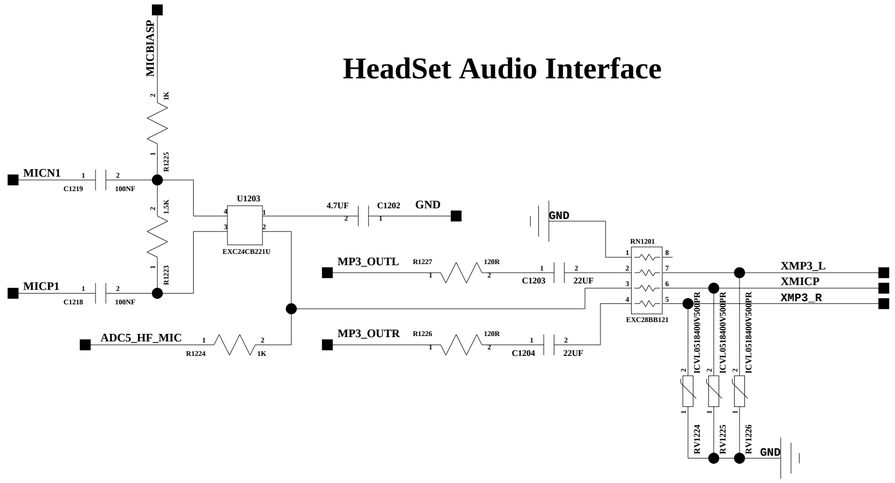

Keypad & Side_Key Connector

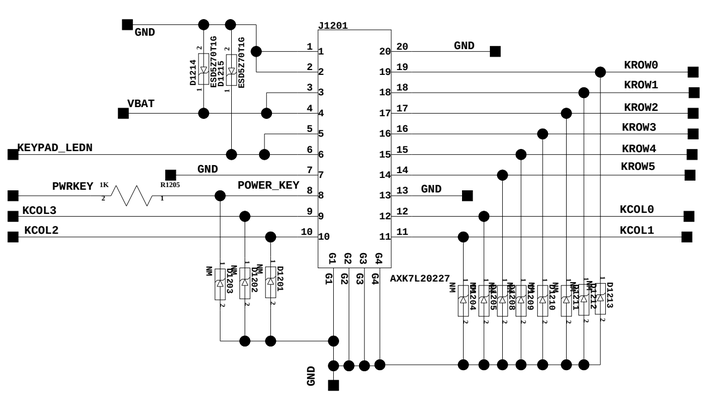

R1202 and R1203 still to be determined

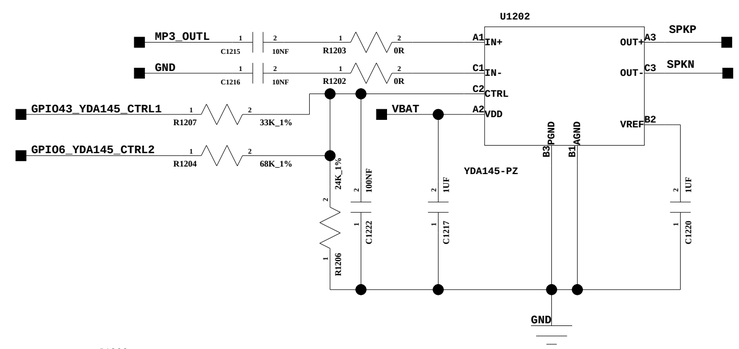

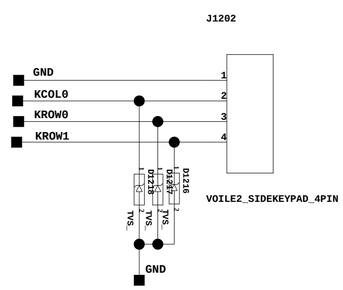

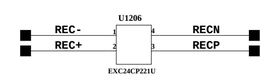

Speaker & RECEIVER

Page - 2 : AUDIO , KEYPAD

Project Name : Voile2

Revision : Voile2_MB_101

Designer : Yangwla

Date : 2007-03

System Connector

JTAG Function : JTDI/JTMS/JTCK/JTRST/JTDO/JRTCK/SYSRST

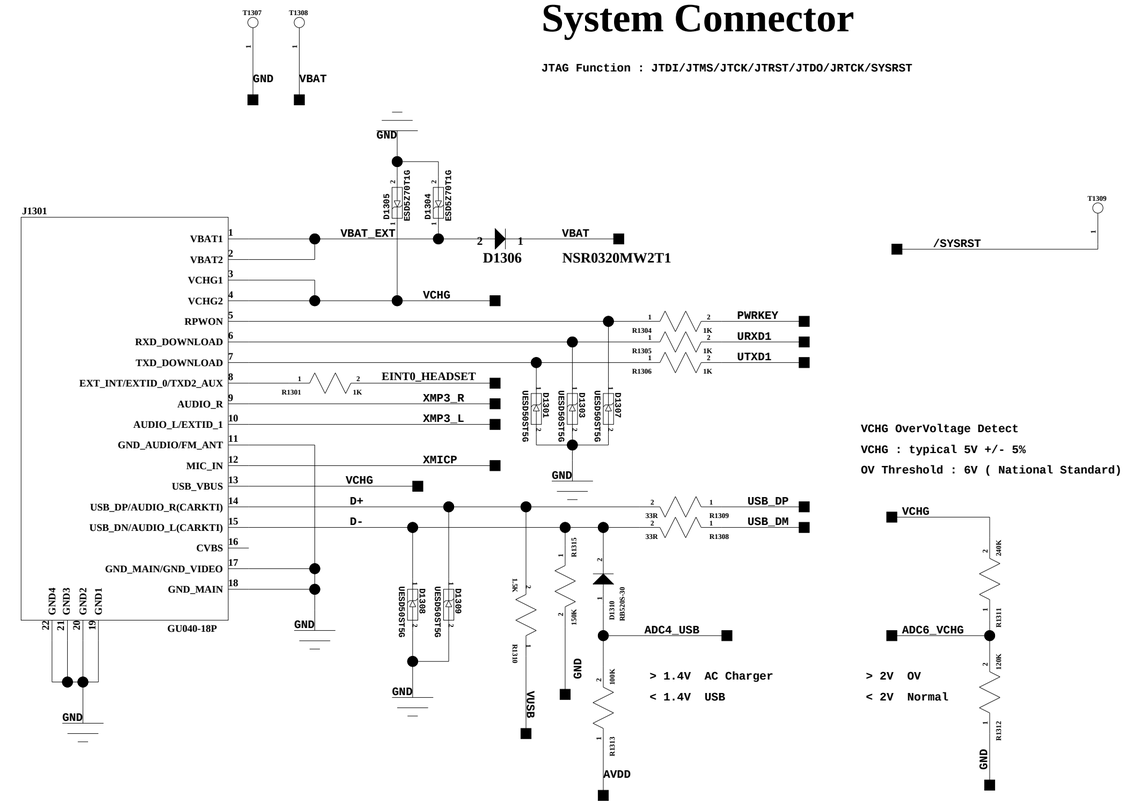

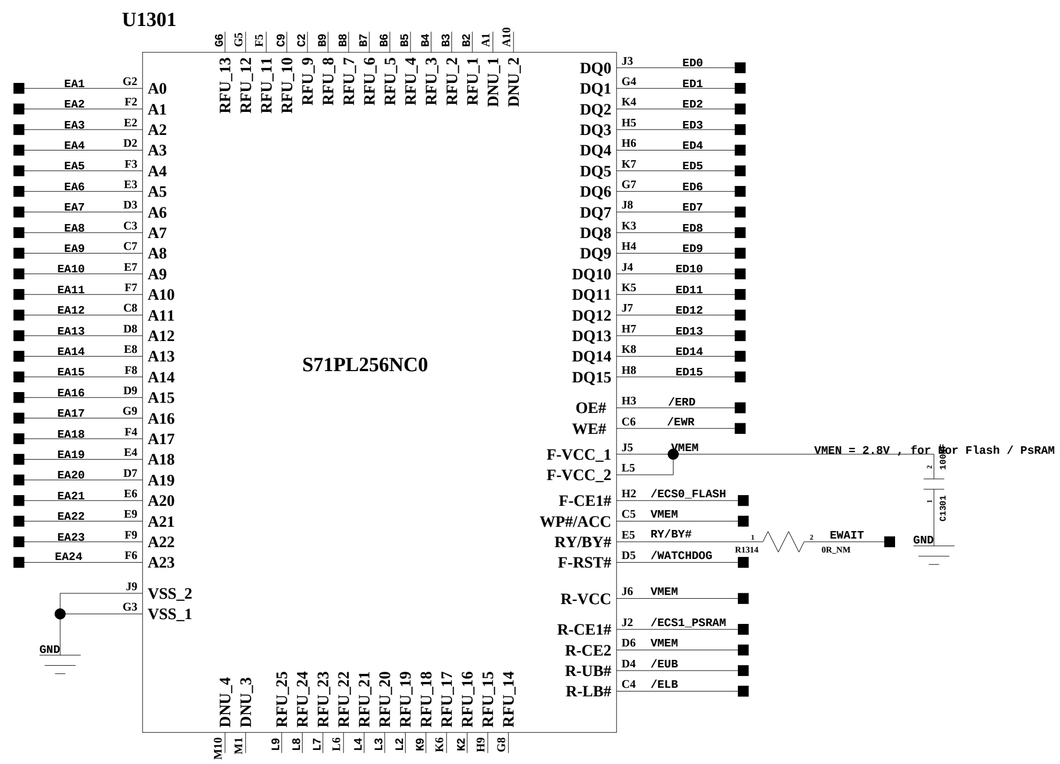

When use 256Mb NorFlash , Decode circuit for Chip-select is required

Battery Connector

Same to View

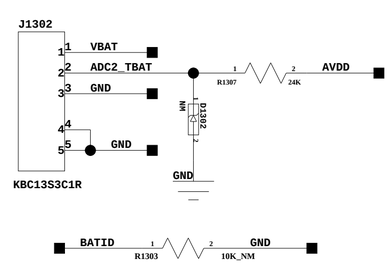

USB Power Converter

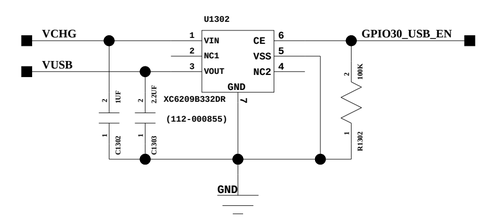

Page - 4 : MMC,Flash,IO CONNECTOR

Project Name : Voile2

Revision : Voile2_MB_H101

Designer : Yangwla

Date : 2007-03

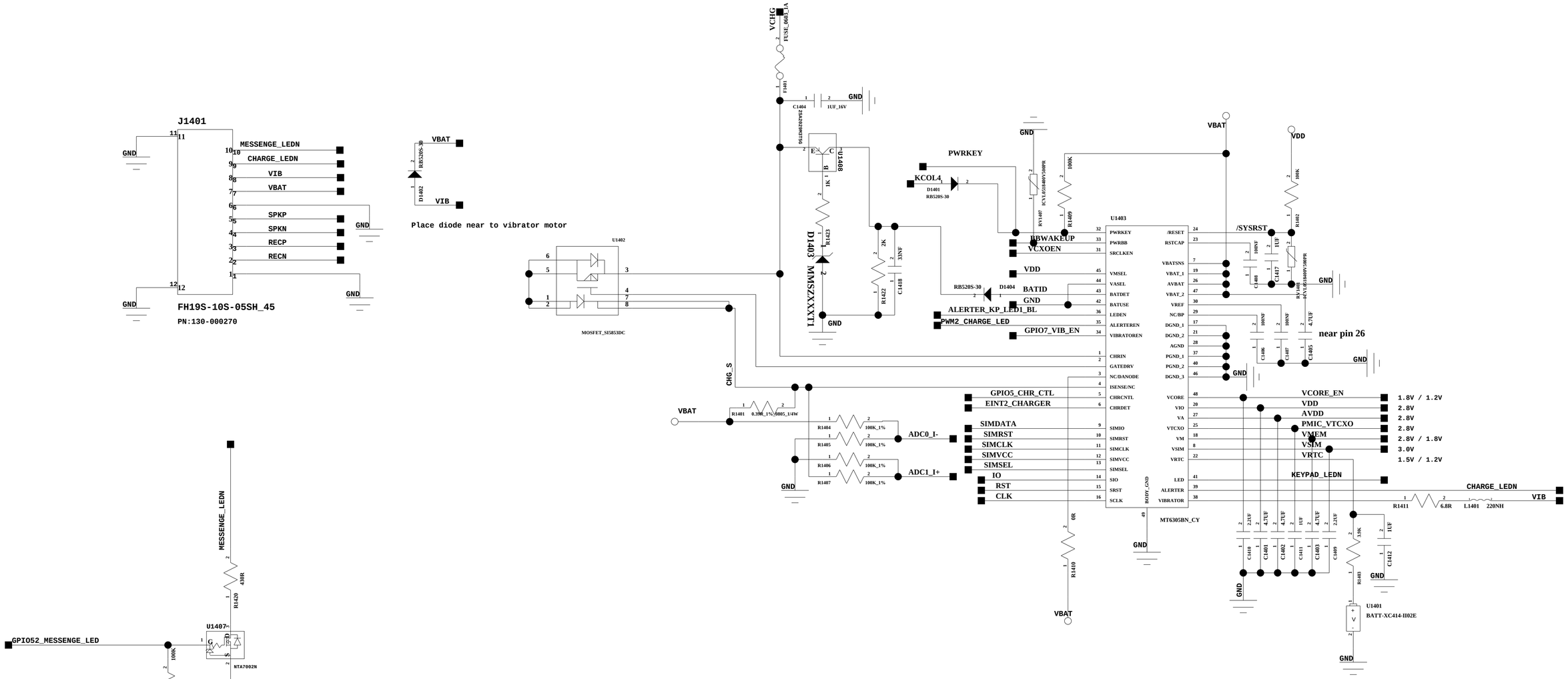

Micro SD (T-Flash) & Sim Card

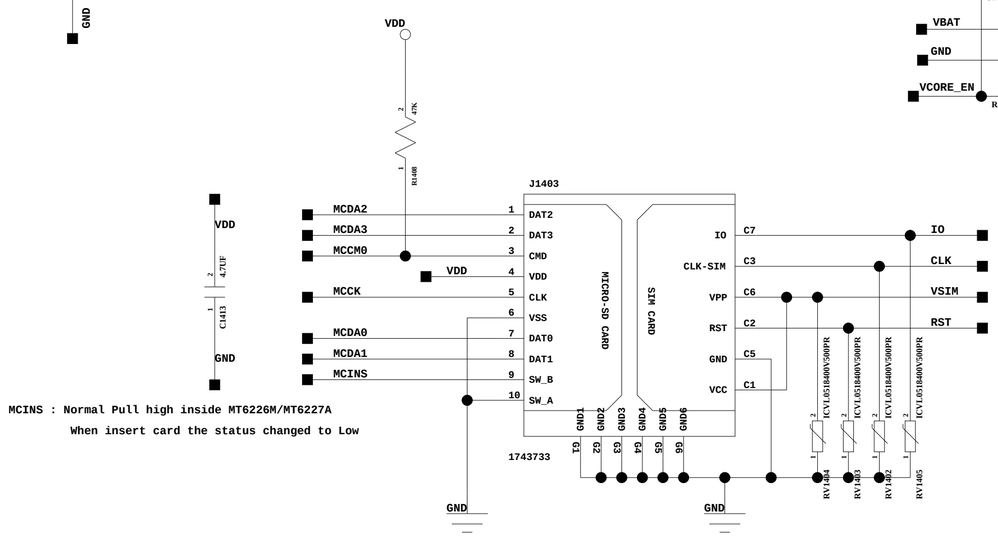

MCINS : Normal Pull high inside MT6226M/MT6227A
When insert card the status changed to Low

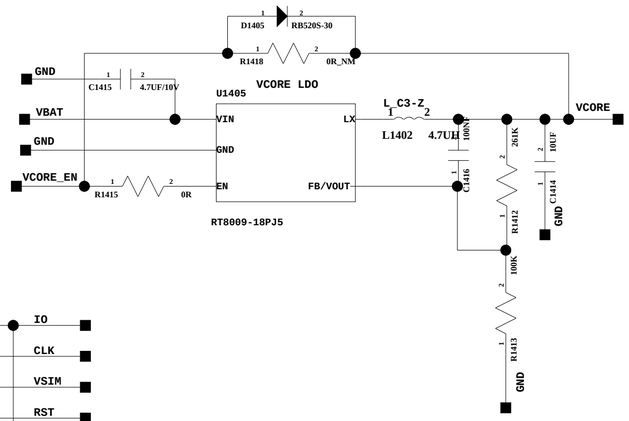

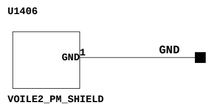

Page - 5 : PMIC , Light

Project Name : Voile2

Revision : Voile2_MB_H101

Designer : Yangwla

Date : 2007-03

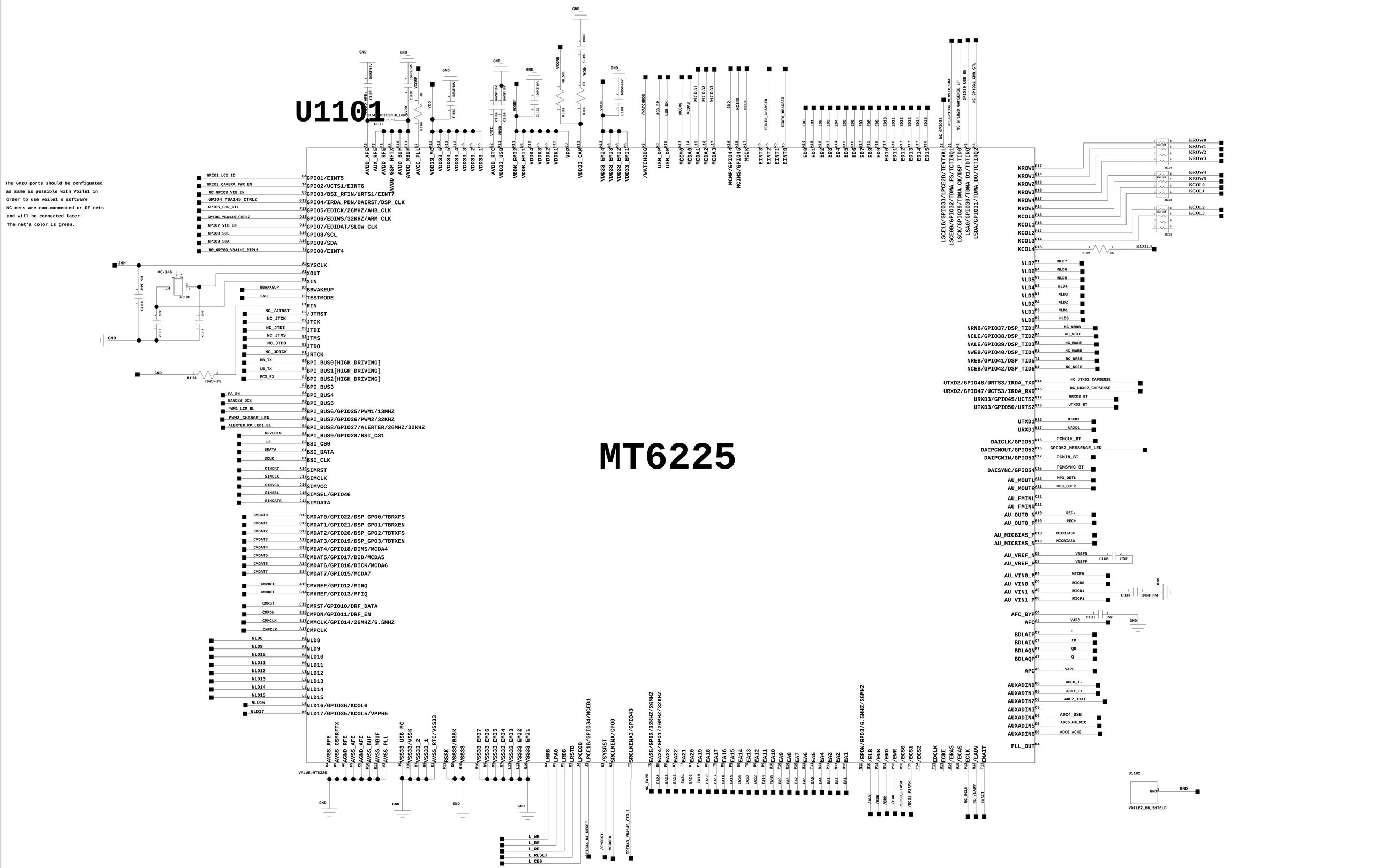

Page-1:MT6225 BB

Project Name : Voile2

Revision : Voile2_MB_H101

Designer : Yangwla

Date : 2007-03

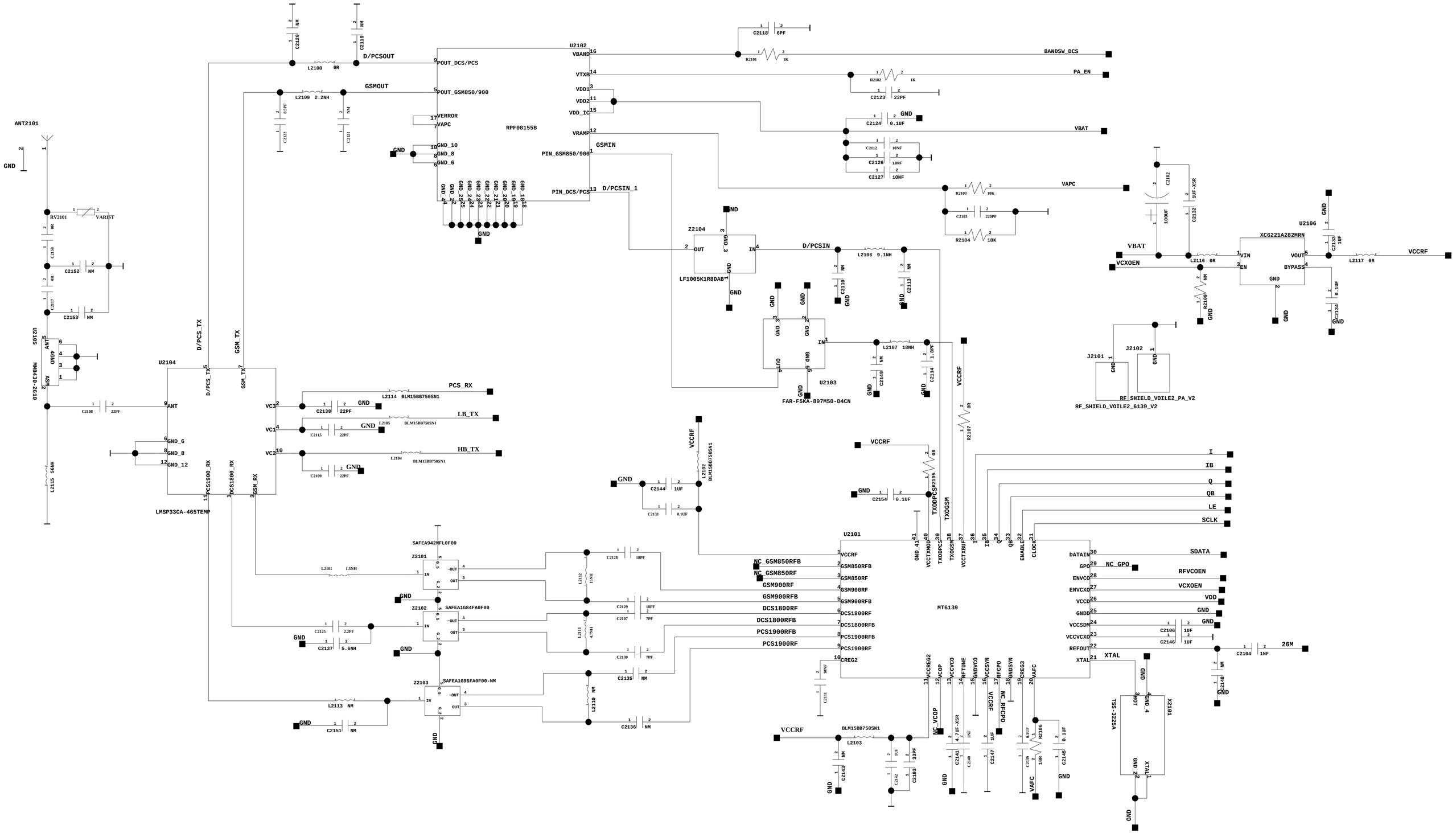

Page - 7 : RF Circuit

Project Name : voile 2

Revision : H301

Designer : Lin GuoXu

Date : 2007-07