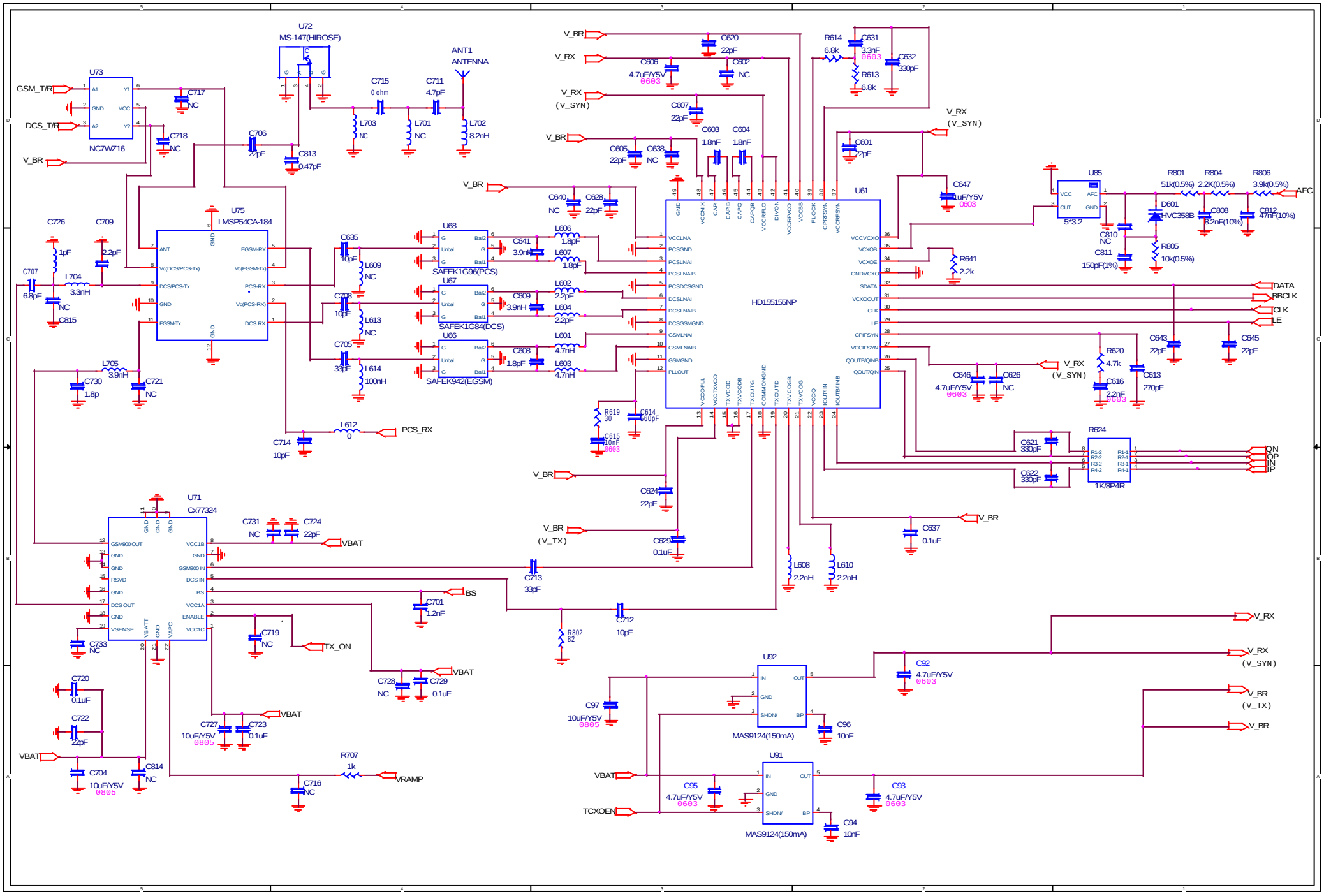
U73
NC7WZ16
GSM_T/R
DCS_T/R
V_BR
C717 NC
C718 NC
C706 22pF
C813 0.47pF
U72
MS-147(HIROSE)
C715 0 ohm
C711 4.7pF
ANT1
ANTENNA
L703 NC
L701 NC
L702 8.2nH
U75
LMSP54CA-184
C726 1pF
C709 2.2pF
C707 6.8pF
L704 3.3nH
C815 NC
L705 3.9nH
C730 1.8p
C721 NC
C635 10pF
L609 NC
C708 10pF
L613 NC
C705 33pF
L614 100nH
L612 0
PCS_RX
C714 10pF
U68
SAFEK1G96(PCS)
U67
SAFEK1G84(DCS)
U66
SAFEK942(EGSM)
C641 3.9nH
C609 3.9nH
C608 1.8pF
L606 1.8pF
L607 1.8pF
L602 2.2pF
L604 2.2pF
L601 4.7nH
L603 4.7nH
C620 22pF
C606 4.7uF/Y5V 0603
C602 NC
C607 22pF
C603 1.8nF
C604 1.8nF
C605 22pF
C638 NC
C640 NC
C628 22pF
V_RX
V_RX (V_SYN)
R614 6.8k
C631 3.3nF 0603
C632 330pF
R613 6.8k
C601 22pF
C647 1uF/Y5V 0603
R641 2.2k
HD155155NP
U61
DATA
BBCLK
CLK
LE
C643 22pF
C645 22pF
C646 4.7uF/Y5V 0603
C626 NC
R620 4.7k
C616 2.2nF 0603
C613 270pF
R619 30
C614 560pF
C615 10nF 0603
C624 22pF
C629 0.1uF
V_BR (V_TX)
C637 0.1uF
L608 2.2nH
L610 2.2nH
U85
5*3.2
R801 51k(0.5%)
R804 2.2K(0.5%)
R806 3.9k(0.5%)
AFC
D601 HVC358B
C808 8.2nF(10%)
C812 47nF(10%)
C810 NC
C811 150pF(1%)
R805 10k(0.5%)
C621 330pF
C622 330pF
R624
1K/8P4R
QN
QP
IN
IP
U71
Cx77324
C731 NC
C724 22pF
VBAT
C713 33pF
BS
C701 1.2nF
C712 10pF
R802 82
C719 NC
TX_ON
C728 NC
C729 0.1uF
C733 NC
C720 0.1uF
C722 22pF
C727 10uF/Y5V 0805
C723 0.1uF
C704 10uF/Y5V 0805
C814 NC
R707 1k
VRAMP
C716 NC
U92
MAS9124(150mA)
C92 4.7uF/Y5V 0603
C97 10uF/Y5V 0805
C96 10nF
U91
MAS9124(150mA)
C95 4.7uF/Y5V 0603
C93 4.7uF/V5V 0603
C94 10nF
TCXOEN
V_RX (V_SYN)
V_BR (V_TX)