U1100_MT6228

U1200_AUDIOKEYPAD

U1300_MMCFLASHIO

U1400_PMIC

U1500_CAMERALCM

U2100_RF

U2200_BT_CSRBGA

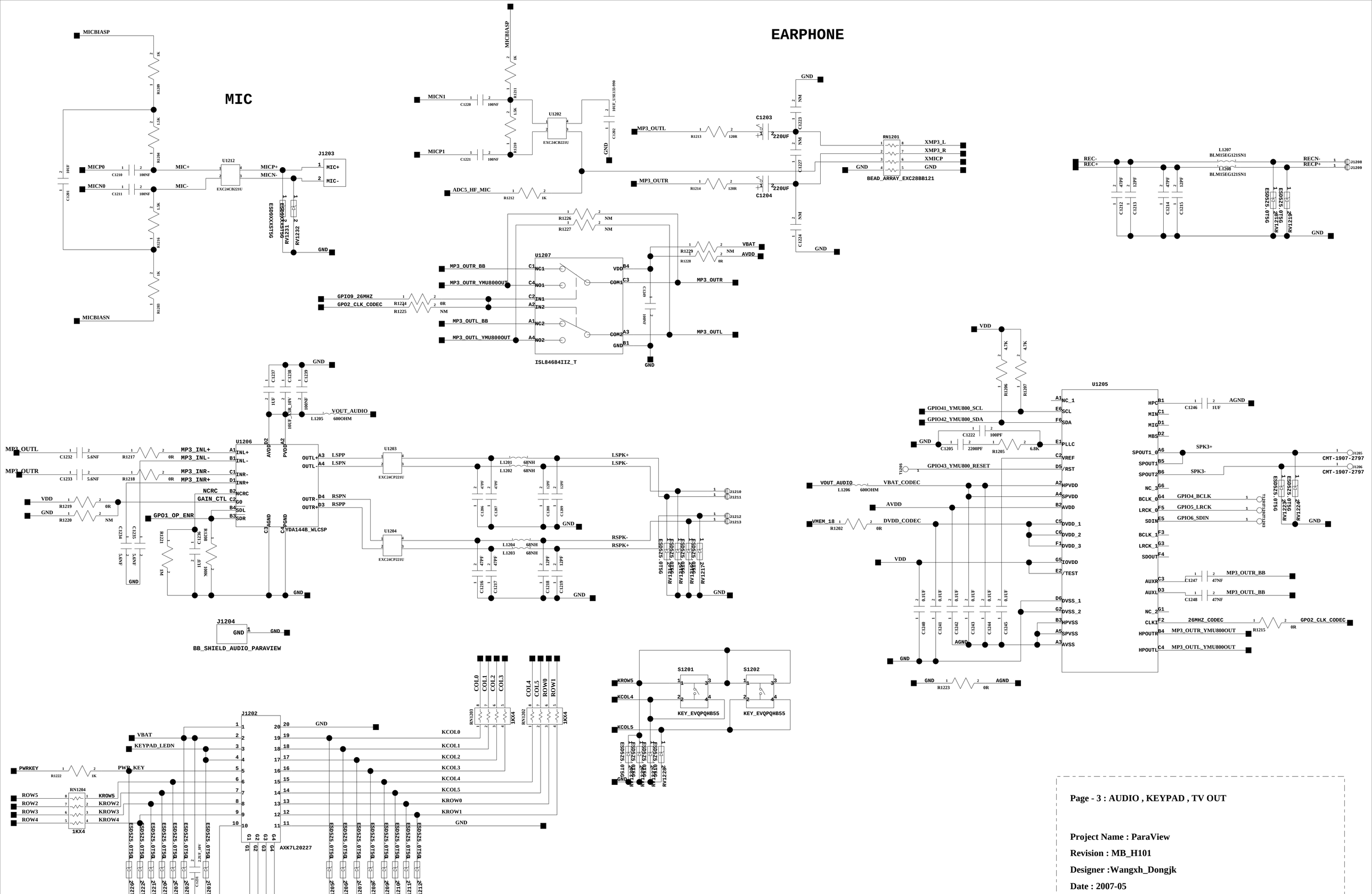

Page - 3 : AUDIO , KEYPAD , TV OUT

Project Name : ParaView

Revision : MB_H101

Designer :Wangxh_Dongjk

Date : 2007-05

SDRAM FLASH
Nand FLASH

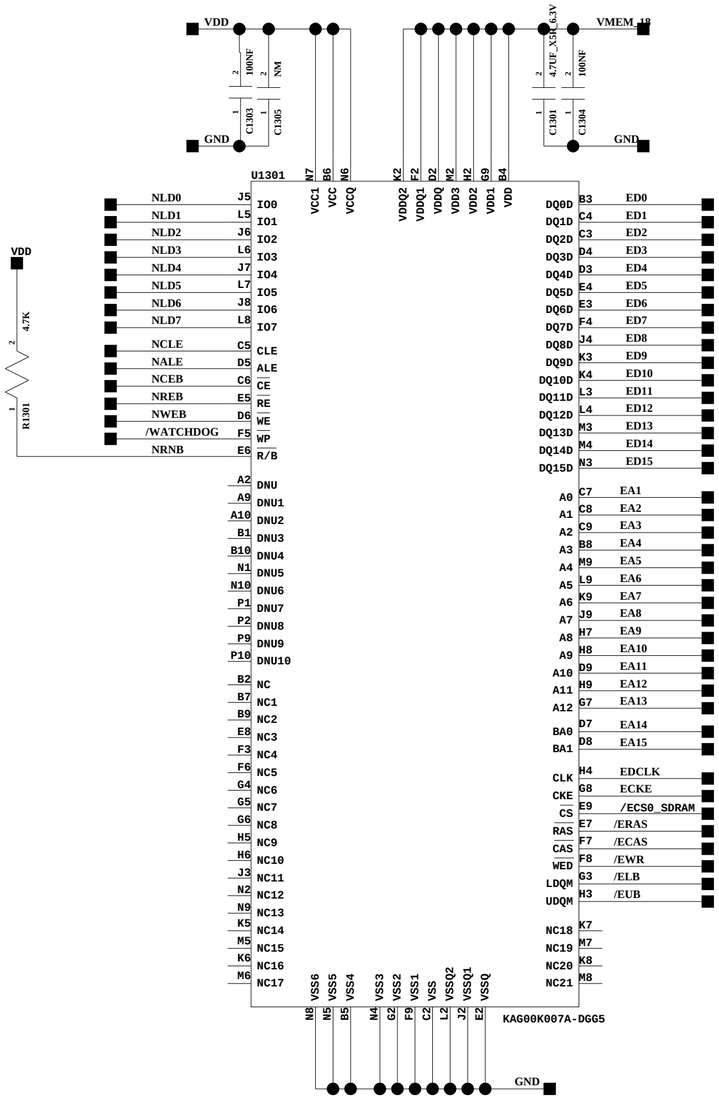

Micro SD (T-Flash) Card

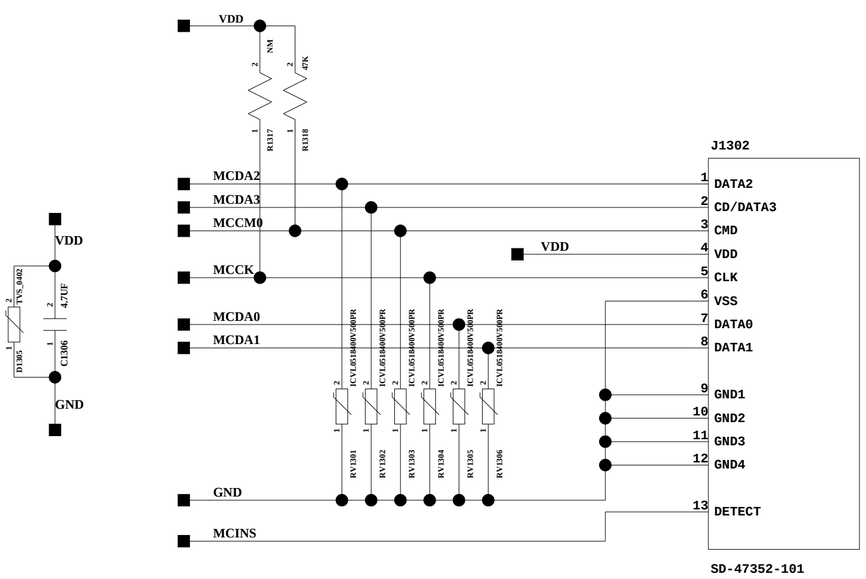

MCINS : Normal Pull high inside MT6227A
When insert card Pin-11 being connected to Pin-12

SYSTEM IO & BATTERY

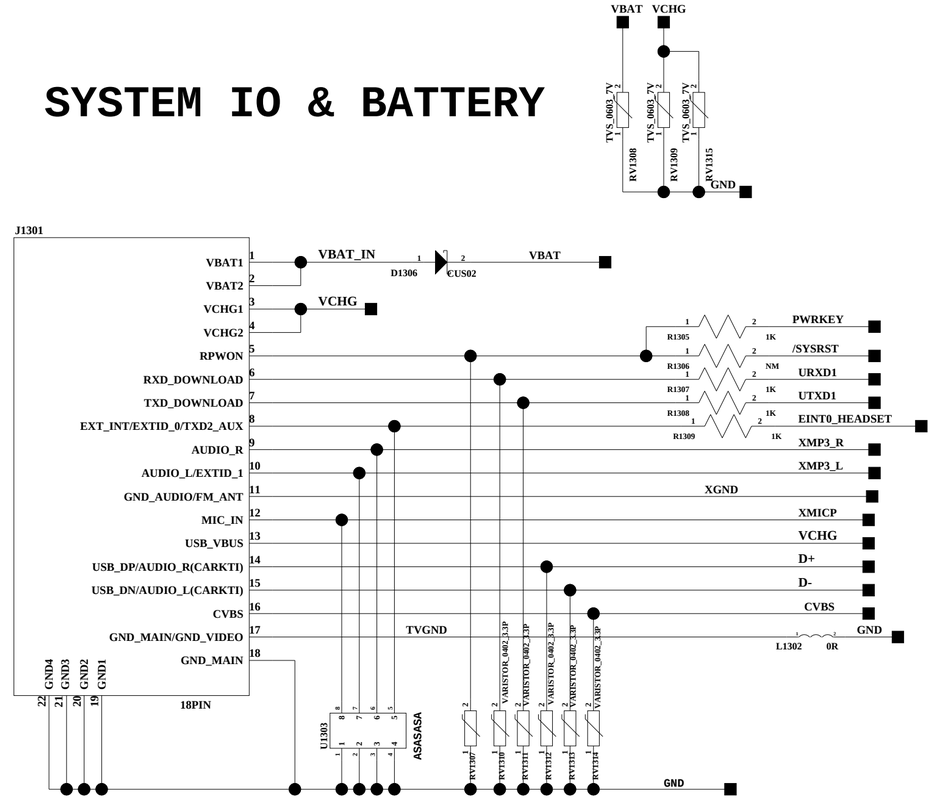

TV OUT

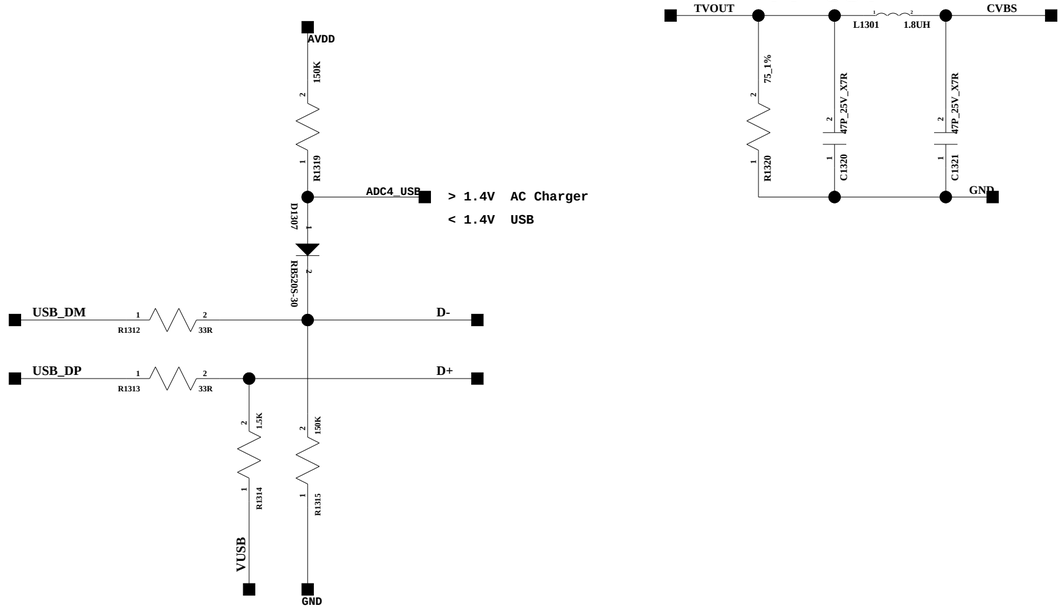

Page - 4 : FLASH , IO CONNECTOR & MMC

Project Name : ParaView

Revision : MB_H101

Designer :Wangxh_Dongjk

Date : 2007-05

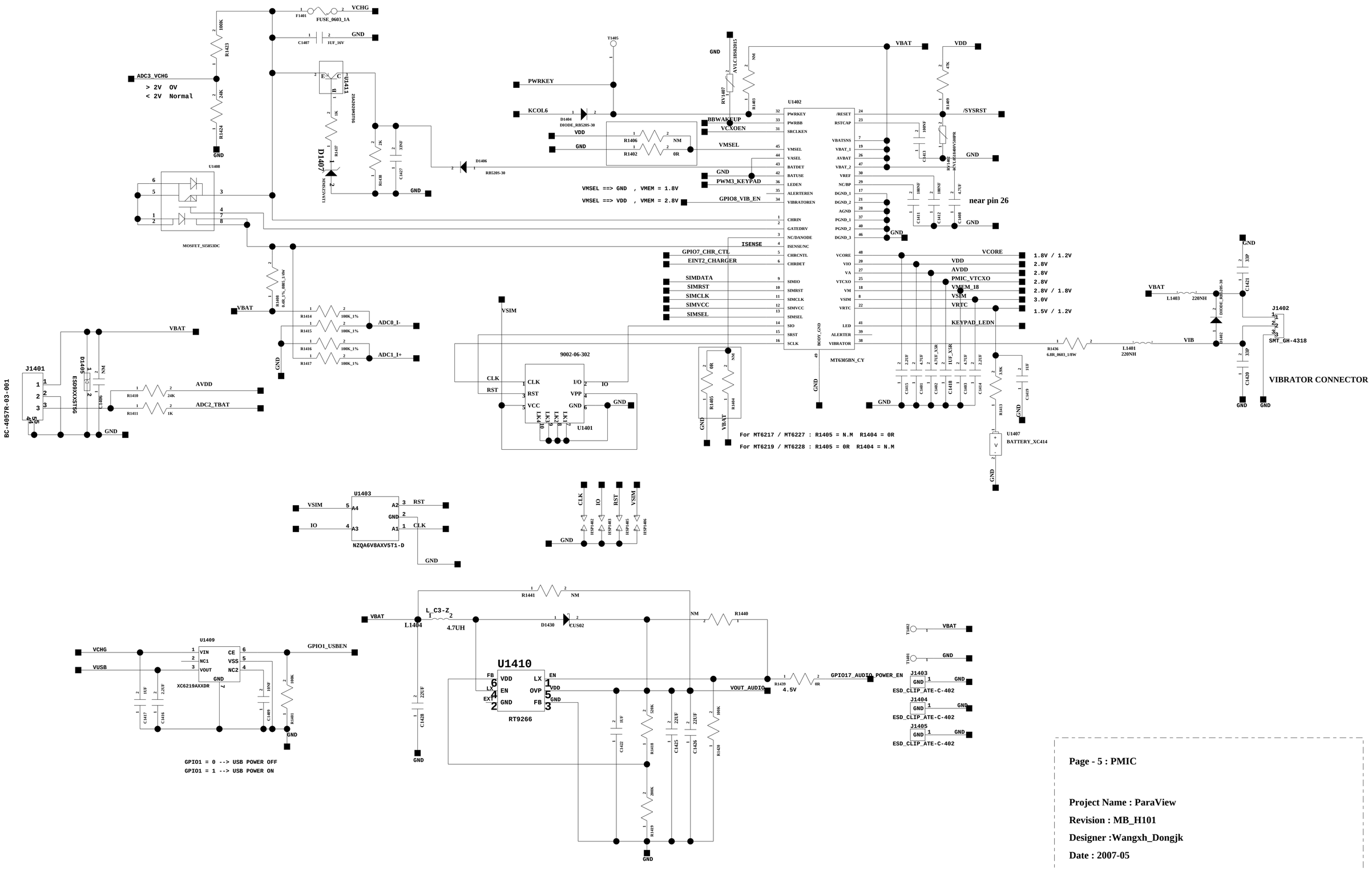

Page - 5 : PMIC

Project Name : ParaView

Revision : MB_H101

Designer :Wangxh_Dongjk

Date : 2007-05

Camera Connector

LiteON Camera (200Mega pixels)

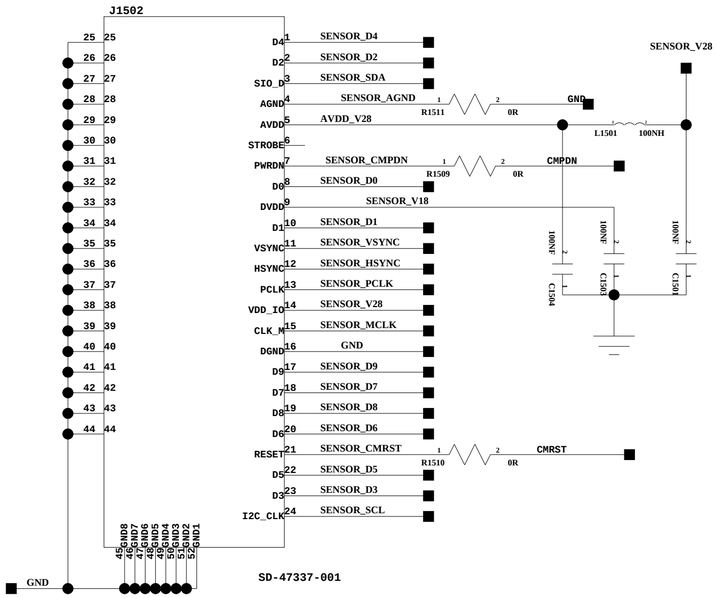

YUV Mode : D2--> D9

RGB Mode : D0--> D9

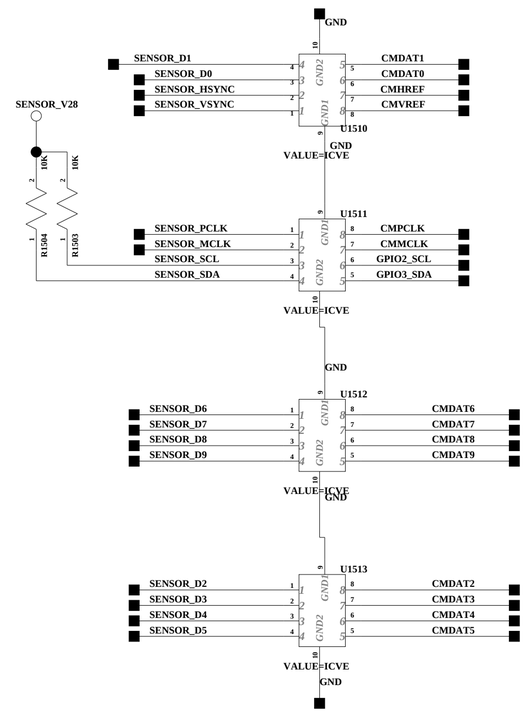

LCM Connector

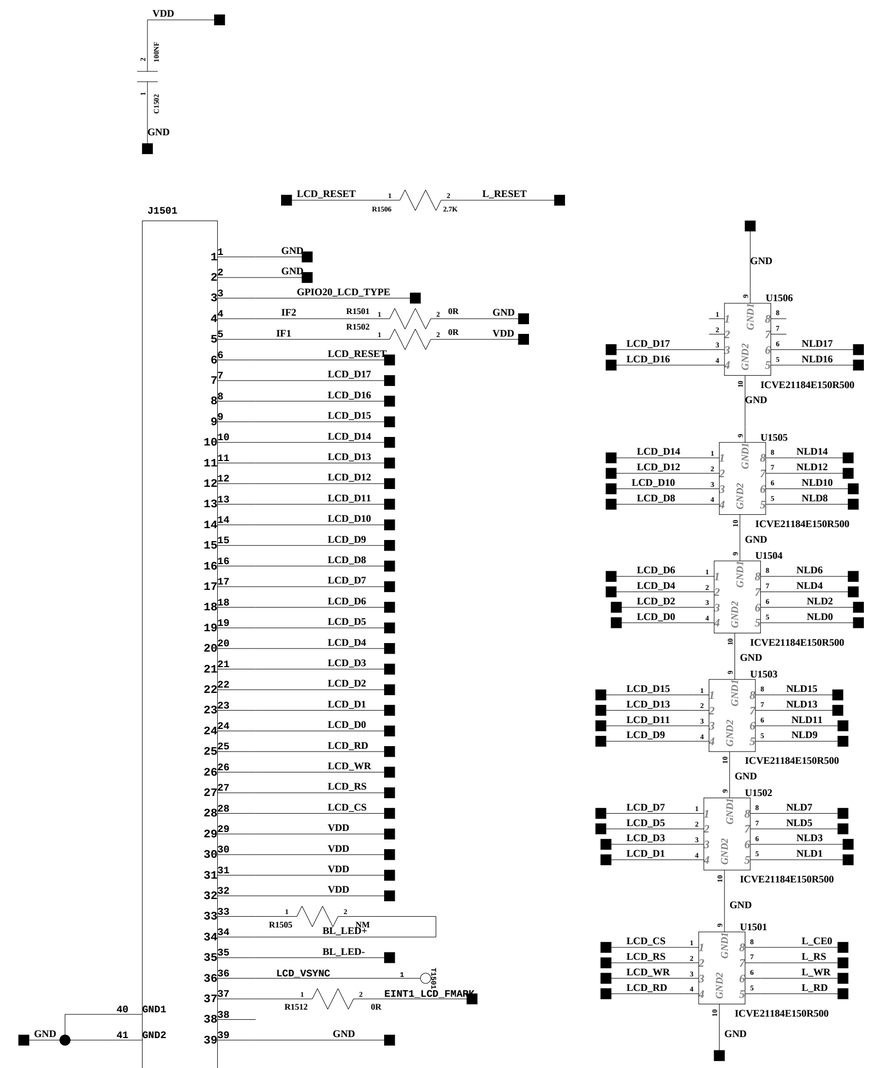

P/N :TX06D103VM0AAA

LCD Module Display Setting

18bit (262K Color) IF1 = VDD , IF2 = GND

16bit (65K Color) IF1 = GND , IF2 = GND

Camera Power

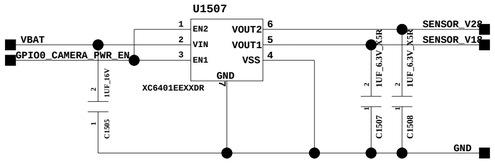

LCD White LED Driver

Analog Voltage 2.45-2.8V

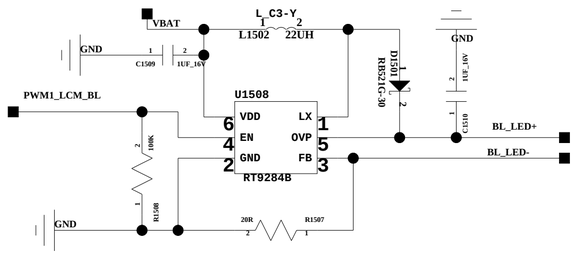

Page - 6 : LCM / Sensor Interface / Flash LED

Project Name : ParaView

Revision : MB_H101

Designer :Wangxh_Dongjk

Date : 2007-05

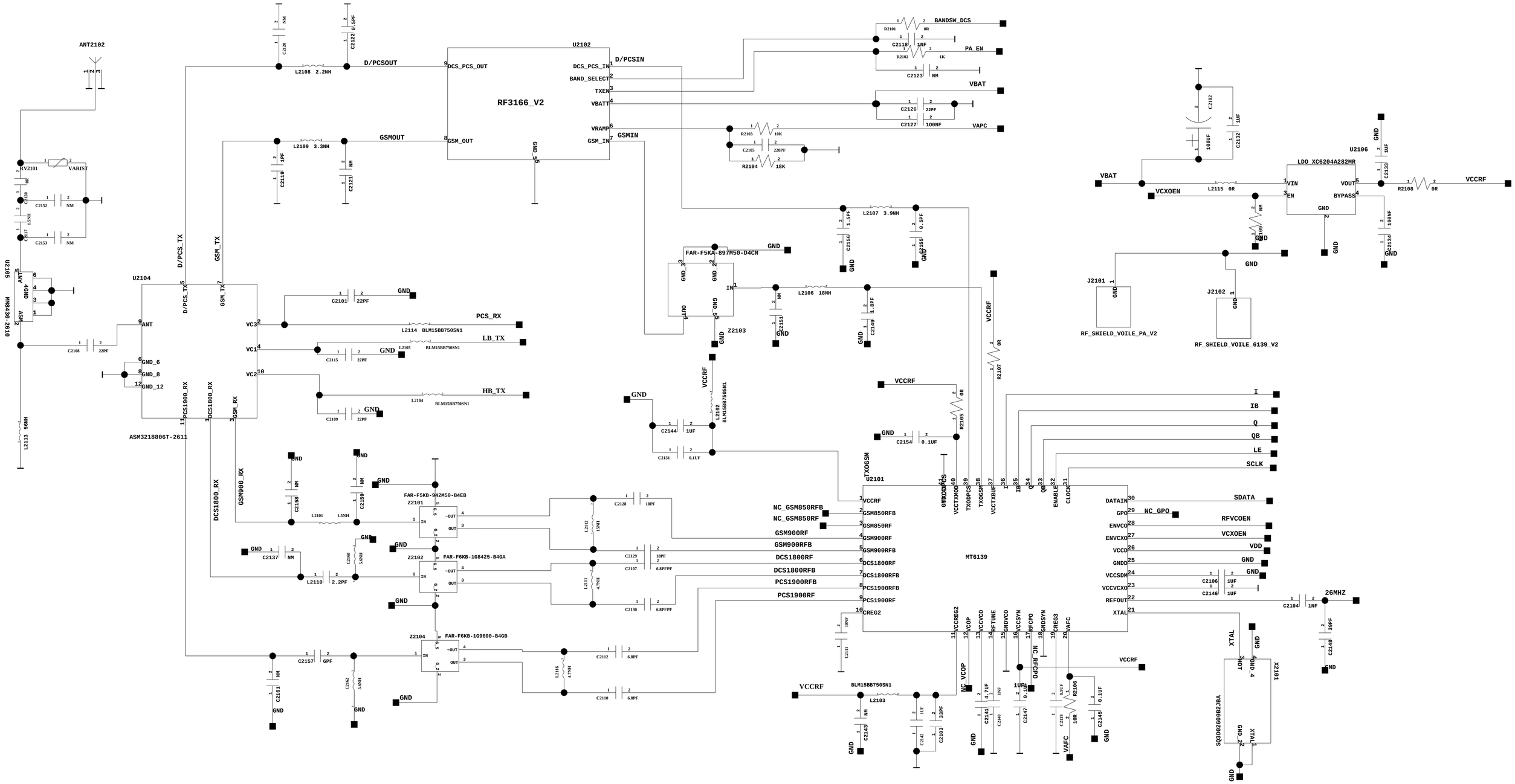

Page - 7 : RF Circuit

Project Name : paraview

Revision : H001

Designer : Cai Yupei

Date : 2007-03

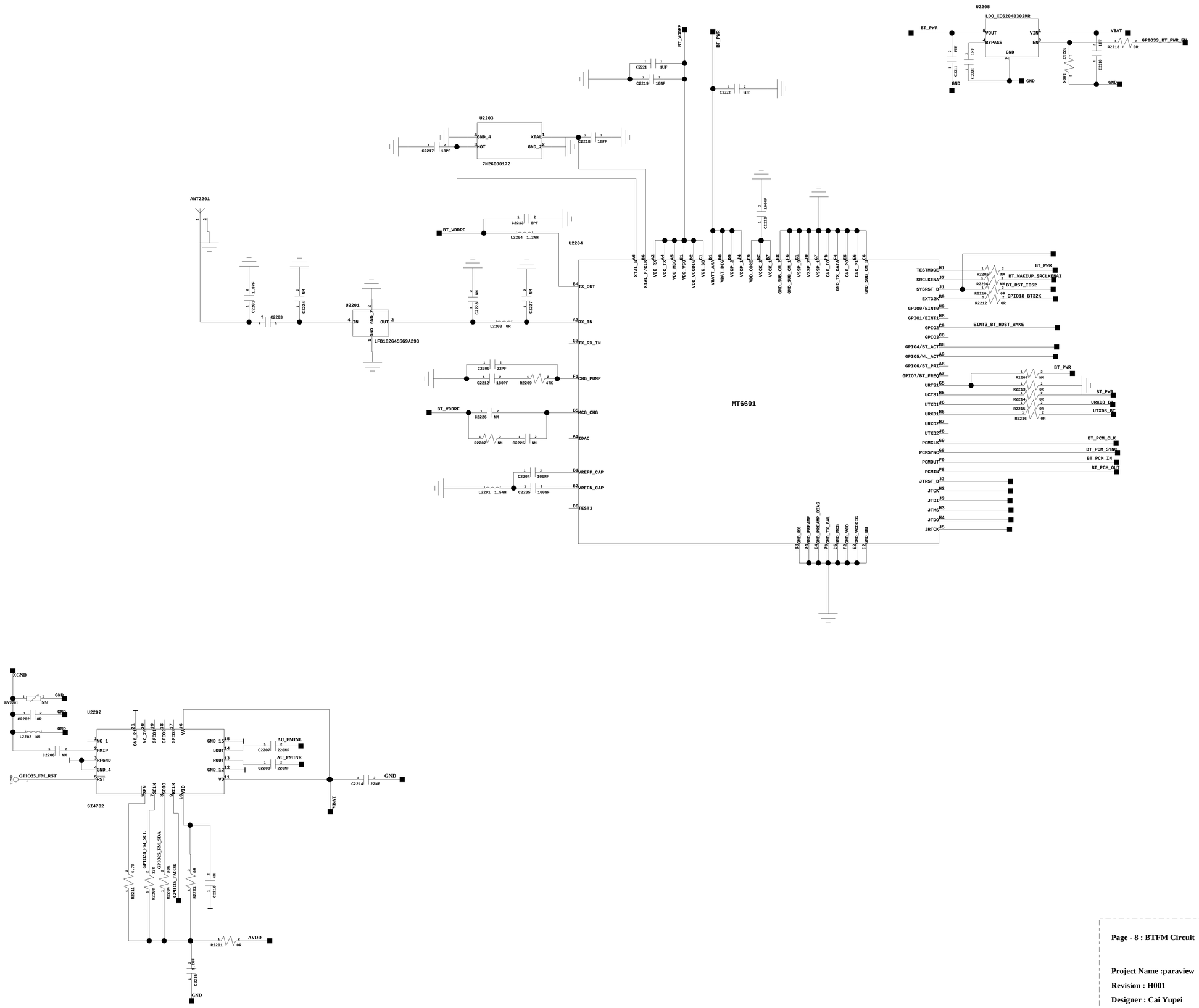

Page - 8 : BTFM Circuit

Project Name :paraview

Revision : H001

Designer : Cai Yupei

Date : 2007-3

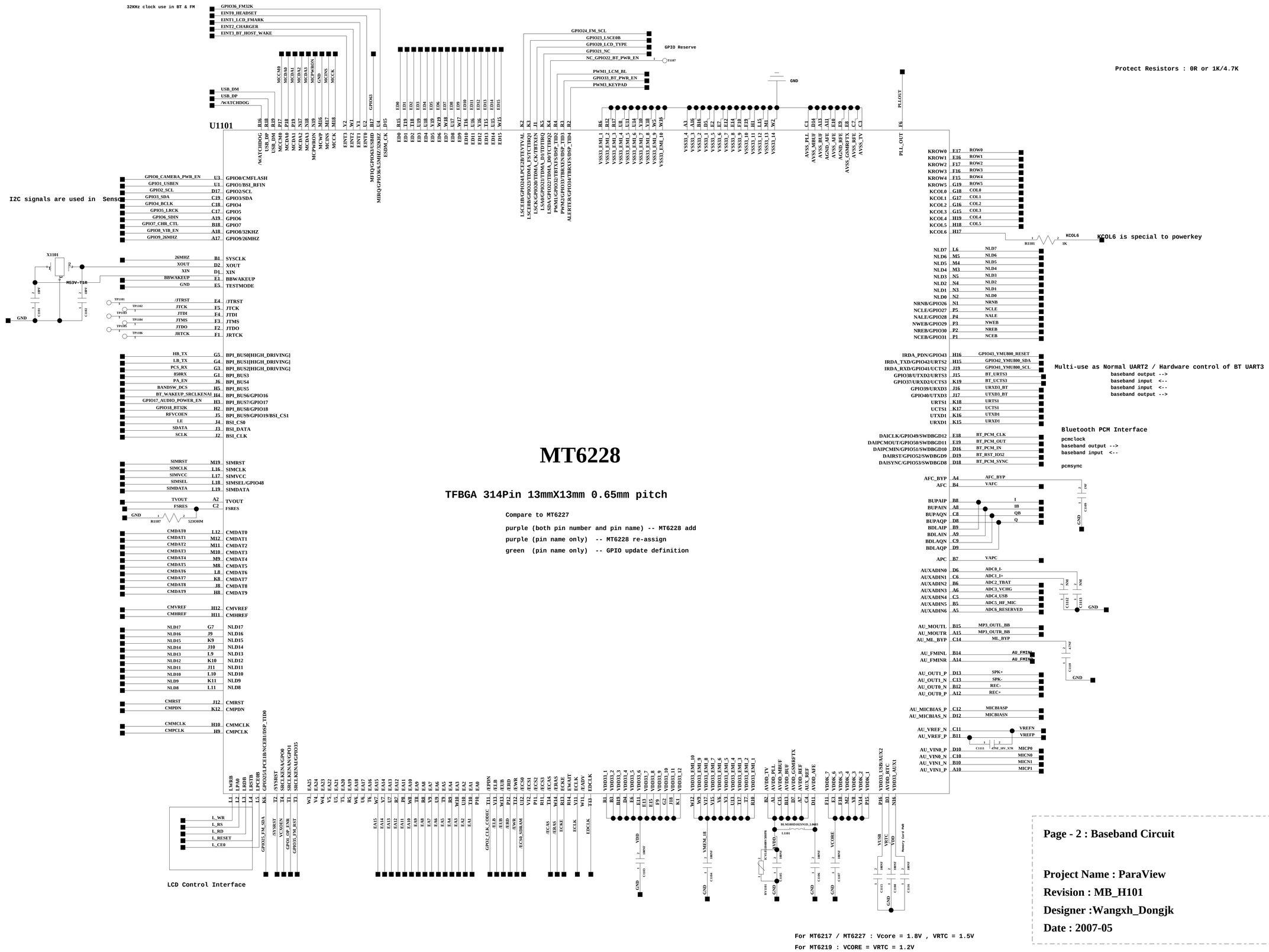

Page - 2 : Baseband Circuit

Project Name : ParaView

Revision : MB_H101

Designer :Wangxh_Dongjk

Date : 2007-05