CDX-F7500/F7700

SERVICE MANUAL

Ver 1.1 2004. 04

AEP Model
UK Model
CDX-F7500/F7700
E Model
CDX-F7700

Photo: CDX-F7700

• The tuner and CD sections have no adjustments.

Model Name Using Similar Mechanism	CDX-F7700/F7705X
CD Drive Mechanism Type	MG-611MA-186//K
Optical Pick-up Name	KSS1000E

SPECIFICATIONS

CD player section

Signal-to-noise ratio	120 dB
Frequency response	10 – 20,000 Hz
Wow and flutter	Below measurable limit

Tuner section

FM

Tuning range	87.5 – 108.0 MHz
Aerial terminal	External aerial connector
Intermediate frequency	10.7 MHz/450 kHz
Usable sensitivity	9 dBf
Selectivity	75 dB at 400 kHz
Signal-to-noise ratio	67 dB (stereo), 69 dB (mono)
Harmonic distortion at 1 kHz	0.5% (stereo), 0.3% (mono)
Separation	35 dB at 1 kHz
Frequency response	30 – 15,000 Hz

MW/LW

Tuning range	MW: 531 – 1,620 kHz LW: 153 – 279 kHz
Aerial terminal	External aerial connector
Intermediate frequency	10.7 MHz/450 kHz
Sensitivity	MW: 30 µV LW: 40 µV

Power amplifier section

Outputs	Speaker outputs (sure seal connectors)
Speaker impedance	4 – 8 ohms
Maximum power output	CDX-F7700: 52 W × 4 (at 4 ohms) CDX-F7500: 50 W × 4 (at 4 ohms)

General

Outputs	Audio output terminals (front/rear) Subwoofer output terminal (mono) Power aerial relay control terminal Power amplifier control terminal
Inputs	Telephone ATT control terminal Illumination control terminal BUS control input terminal BUS audio input or AUX IN terminal Remote controller input terminal Aerial input terminal
Tone controls	Bass ±8 dB at 100 Hz Treble ±8 dB at 10 kHz
Loudness	+8 dB at 100 Hz +2 dB at 10 kHz
Power requirements	12 V DC car battery (negative earth)
Dimensions	Approx. 178 × 50 × 178 mm (w/h/d)
Mounting dimensions	Approx. 182 × 53 × 161 mm (w/h/d)
Mass	Approx. 1.3 kg
Supplied accessories	Parts for installation and connections (1 set) Front panel case (1) Card remote commander RM-X140

Design and specifications are subject to change without notice.

FM/MW/LW COMPACT DISC PLAYER

9-877-604-02
2004D04-1
© 2004. 04
Sony Corporation
e Vehicle Company
Published by Sony Engineering Corporation

SONY®

SERVICE NOTES

NOTES ON HANDLING THE OPTICAL PICK-UP BLOCK OR BASE UNIT

The laser diode in the optical pick-up block may suffer electrostatic breakdown because of the potential difference generated by the charged electrostatic load, etc. on clothing and the human body.
During repair, pay attention to electrostatic breakdown and also use the procedure in the printed matter which is included in the repair parts.
The flexible board is easily damaged and should be handled with care.

NOTES ON LASER DIODE EMISSION CHECK

The laser beam on this model is concentrated so as to be focused on the disc reflective surface by the objective lens in the optical pick-up block. Therefore, when checking the laser diode emission, observe from more than 30 cm away from the objective lens.

Notes on Chip Component Replacement

- Never reuse a disconnected chip component.
- Notice that the minus side of a tantalum capacitor may be damaged by heat.

CAUTION

Use of controls or adjustments or performance of procedures other than those specified herein may result in hazardous radiation exposure.

If the optical pick-up block is defective, please replace the whole optical pick-up block.
Never turn the semi-fixed resistor located at the side of optical pick-up block.

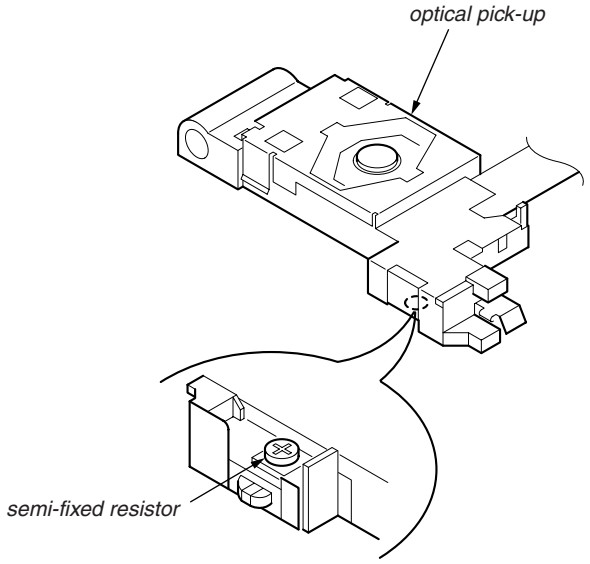

TEST DISCS

This set can playback CD-R and CD-ROM discs. The following test discs should be used to check the capability:

CD-R test disc TCD-R082LMT (Part No. J-2502-063-1)
CD-RW test disc TCD-W082L (Part No. J-2502-063-2)

CLASS 1
LASER PRODUCT

This label is located on the bottom of the chassis.

SAFETY-RELATED COMPONENT WARNING!!

COMPONENTS IDENTIFIED BY MARK ⚠ OR DOTTED LINE WITH MARK ⚠ ON THE SCHEMATIC DIAGRAMS AND IN THE PARTS LIST ARE CRITICAL TO SAFE OPERATION. REPLACE THESE COMPONENTS WITH SONY PARTS WHOSE PART NUMBERS APPEAR AS SHOWN IN THIS MANUAL OR IN SUPPLEMENTS PUBLISHED BY SONY.

Notes on CD-Rs (recordable CDs)/CD-RWs (rewritable CDs)

This unit can play the following discs:

Type of discs	Label on the disc
Audio CD	COMPACT disc DIGITAL AUDIO Recordable COMPACT disc DIGITAL AUDIO ReWritable
MP3 files	COMPACT disc DIGITAL AUDIO Recordable COMPACT disc DIGITAL AUDIO ReWritable COMPACT disc Recordable COMPACT disc ReWritable

- Some CD-Rs/CD-RWs (depending on the equipment used for its recording or the condition of the disc) may not play on this unit.
- You cannot play a CD-R/CD-RW that is not finalized*.
- You can play MP3 files recorded on CD-ROMs, CD-Rs, and CD-RWs.
- A CD-R/CD-RW to which a session can be added can be played.

* A process necessary for a recorded CD-R/CD-RW disc to be played on the audio CD player.

EXTENSION CABLE AND SERVICE POSITION

When repairing or servicing this set, connect the jig (extension cable) as shown below.

- Connect the MAIN board (CN751) and the SERVO board (CN2) with the extension cable (Part No. J-2502-076-1).

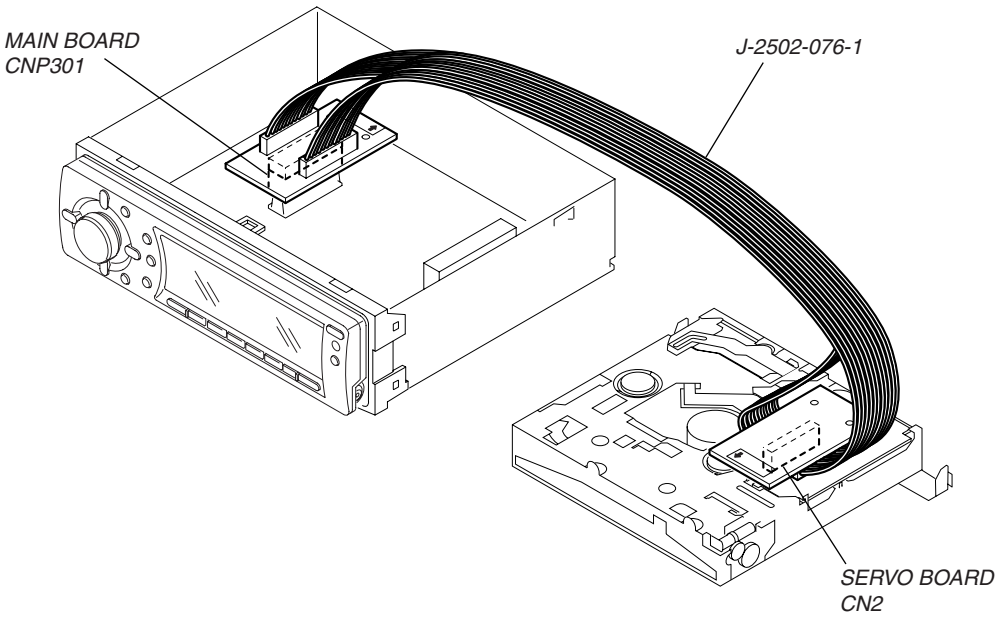

● UNLEADED SOLDER

Boards requiring use of unleaded solder are printed with the lead free mark (LF) indicating the solder contains no lead.
(Caution: Some printed circuit boards may not come printed with the lead free mark due to their particular size.)

: LEAD FREE MARK

Unleaded solder has the following characteristics.

- Unleaded solder melts at a temperature about 40°C higher than ordinary solder.
  Ordinary soldering irons can be used but the iron tip has to be applied to the solder joint for a slightly longer time.
  Soldering irons using a temperature regulator should be set to about 350°C.
  Caution: The printed pattern (copper foil) may peel away if the heated tip is applied for too long, so be careful!
- Strong viscosity
  Unleaded solder is more viscous (sticky, less prone to flow) than ordinary solder so use caution not to let solder bridges occur such as on IC pins, etc.
- Usable with ordinary solder
  It is best to use only unleaded solder but unleaded solder may also be added to ordinary solder.

TABLE OF CONTENTS

1. GENERAL

Location of Controls 5
Connections 6

2. DISASSEMBLY

2-1. Sub Panel Assy (CD) 9
2-2. CD Mechanism Block 9
2-3. Main Board 10
2-4. Chassis (T) Sub Assy 10
2-5. Roller Arm Assy 11
2-6. Chassis (OP) Assy 11
2-7. Optical Pick-up 12
2-8. SL Motor Assy (M902) 12
2-9. LE Motor Assy (M903) 13
2-10. Servo Board 13

3. DIAGRAMS

3-1. IC Pin Descriptions 14
3-2. Block Diagram –CD Section– 20
3-3. Block Diagram –Main Section– 21
3-4. Block Diagram –Display Section– 22
3-5. Note for Printed Wiring Boards and Schematic Diagrams 23
3-6. Waveforms 23
3-7. Circuit Boards Location 23
3-8. Schematic Diagram –CD Mechanism Section (1/2)– 24
3-9. Schematic Diagram –CD Mechanism Section (2/2)– 25
3-10. Printed Wiring Boards –CD Mechanism Section– 26
3-11. Schematic Diagram –Main Section (1/3)– 27
3-12. Schematic Diagram –Main Section (2/3)– 28
3-13. Schematic Diagram –Main Section (3/3)– 29
3-14. Printed Wiring Boards –Main Section– 30
3-15. Printed Wiring Board –Sub Section– 32
3-16. Schematic Diagram –Sub Section– 33
3-17. Printed Wiring Board –Key Section– 34
3-18. Schematic Diagram –Key Section– 35
3-19. IC Block Diagrams 36

4. EXPLODED VIEWS

4-1. Main Section 38
4-2. Front Panel Section 39
4-3. CD Mechanism Section (1) 40
4-4. CD Mechanism Section (2) 41
4-5. CD Mechanism Section (3) 42
4-6. CD Mechanism Section (4) 43

5. ELECTRICAL PARTS LIST 44

SECTION 1
GENERAL

This section is extracted from instruction manual.

Location of controls

Card remote commander RM-X140

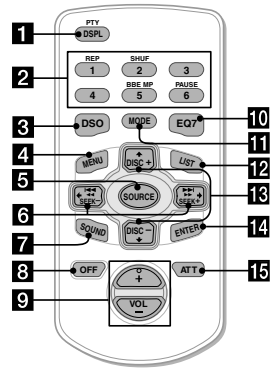

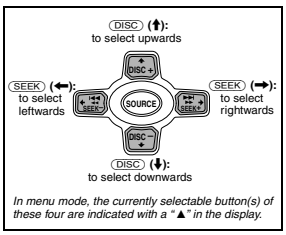

In menu mode, the currently selectable button(s) of these four are indicated with a "▲" in the display.

Refer to the pages listed for details.

1 **DSPL/PTY (display mode change/ programme type) button** 13, 16, 19, 22, 25
2 **Number buttons**
Radio:
To store stations/receive stored stations.
CD/MD:
(1): **REP** 14
(2): **SHUF** 15
(6): **PAUSE***1 12
Sound:
(5): **BBE MP***1 24
3 **DSO button** 27
4 **MENU button**
To display the menus.
5 **SOURCE (Power on/Radio/CD/MD***2**/ AUX***3**) button**
To select the source.
6 **SEEK/AMS (◀/▶) buttons**
To skip tracks/fast-forward, reverse a track/ tune in stations automatically, find a station manually/select a setting.
7 **SOUND button** 24
8 **OFF (Stop/Power off) button** 12, 29
9 **VOL (+/–) buttons**
To turn up or down the volume.
10 **EQ7 button** 26
11 **MODE button**
To change operation.
12 **LIST button** 16, 18
13 **DISC (ALBUM) (▲/▼) buttons**
To receive preset stations/change the disc*4, skip albums*5/select a menu.
14 **ENTER button**
To enter a setting.
15 **ATT button** 25

*1 *Available only when playing back on this unit.*
*2 *When an optional MD unit is connected.*
*3 *Available only when an optional Sony portable device is connected to AUX IN terminal of the unit. When you connect a Sony portable device and CD/ MD unit(s) at the same time, use the AUX IN selector.*
*4 *When an optional CD/MD unit is connected.*
*5 *Available only when an MP3 file is played.*

Note
If the display disappears by pressing (OFF), it cannot be operated with the card remote commander unless (SOURCE) on the unit is pressed, or a disc is inserted to activate the unit first.

Tip
For details on how to replace the battery, see "Replacing the lithium battery" on page 30.

Selecting a disc and album

Disc and album can be skipped using the DISC (ALBUM) (▲/▼) buttons.

(With this unit)

To	Press
Skip albums*6 – Album selection	▲ or ▼ [once for each album] To continuously skip albums, press and hold either button.

(With optional unit)

To	Press
Skip discs – Disc selection	▲ or ▼ [once for each disc] To continuously skip discs, press once and press again within about 1 second (and hold) either button.
Skip albums*6 – Album selection	▲ or ▼ [hold for a moment] and release. To continuously skip albums, press (and hold) within about 1 second of first releasing the button.

*6 *Available only when an MP3 file is played.*

Skipping tracks continuously

Press once either SEEK/AMS (◀ or ▶) button, then press again within about 1 second and hold.

• AEP, UK Model

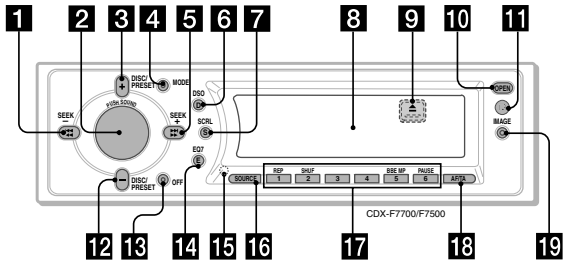

The buttons on the unit share the same functions as those on the card remote commander.

1 5 **SEEK/AMS (I◀◀ ◀◀/▶▶ ▶▶I) buttons**
2 **Volume control dial/SOUND button**
Rotate to:
– Adjust the volume.
– Adjust the sound settings.
Press to:
– Select the sound items.
3 12 **DISC (ALBUM)/PRESET (+/–) buttons**
4 **MODE button**
6 **DSO button**
7 **SCRL (scroll) button**
8 **Display window**
9 **⏏ (eject) button** (located on the front side of the unit, behind the front panel) 12
10 **OPEN button** 10, 12
11 **Receptor for the card remote commander**
13 **OFF (Stop/Power off) button***
14 **EQ7 button**
15 **RESET button** (located on the front side of the unit, behind the front panel) 10
16 **SOURCE button**
17 **Number buttons**
18 **AF/TA button** 19, 20, 21
19 **IMAGE button** 28

* **Warning when installing in a car without an ACC (accessory) position on the ignition switch**
After turning off the ignition, be sure to press and hold (OFF) on the unit until the display disappears.
Otherwise, the display does not turn off and this causes battery drain.

• E Model

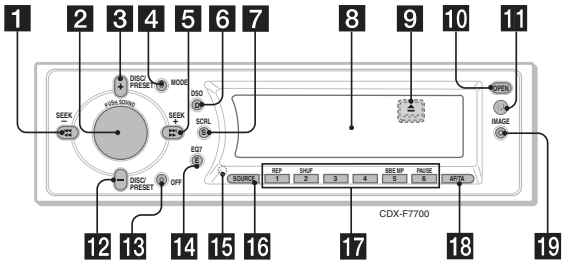

The buttons on the unit share the same functions as those on the card remote commander.

1 5 **SEEK/AMS (I◀◀ ◀◀/▶▶ ▶▶I) buttons**
2 **Volume control dial/SOUND button**
Rotate to:
– Adjust the volume.
– Adjust the sound settings.
Press to:
– Select the sound items.
3 12 **DISC (ALBUM)/PRESET (+/–) buttons**
4 **MODE button**
6 **DSO button**
7 **SCRL (scroll) button**
8 **Display window**
9 **⏏ (eject) button** (located on the front side of the unit, behind the front panel) 12, 12
10 **OPEN button** 10, 12, 12
11 **Receptor for the card remote commander**
13 **OFF (Stop/Power off) button***
14 **EQ7 button**
15 **RESET button** (located on the front side of the unit, behind the front panel) 10
16 **SOURCE button**
17 **Number buttons**
18 **AF/TA button** 19, 20, 20, 21, 21
19 **IMAGE button** 28

* **Warning when installing in a car without an ACC (accessory) position on the ignition switch**
After turning off the ignition, be sure to press and hold (OFF) on the unit until the display disappears.
Otherwise, the display does not turn off and this causes battery drain.

Connections (AEP, UK Model)

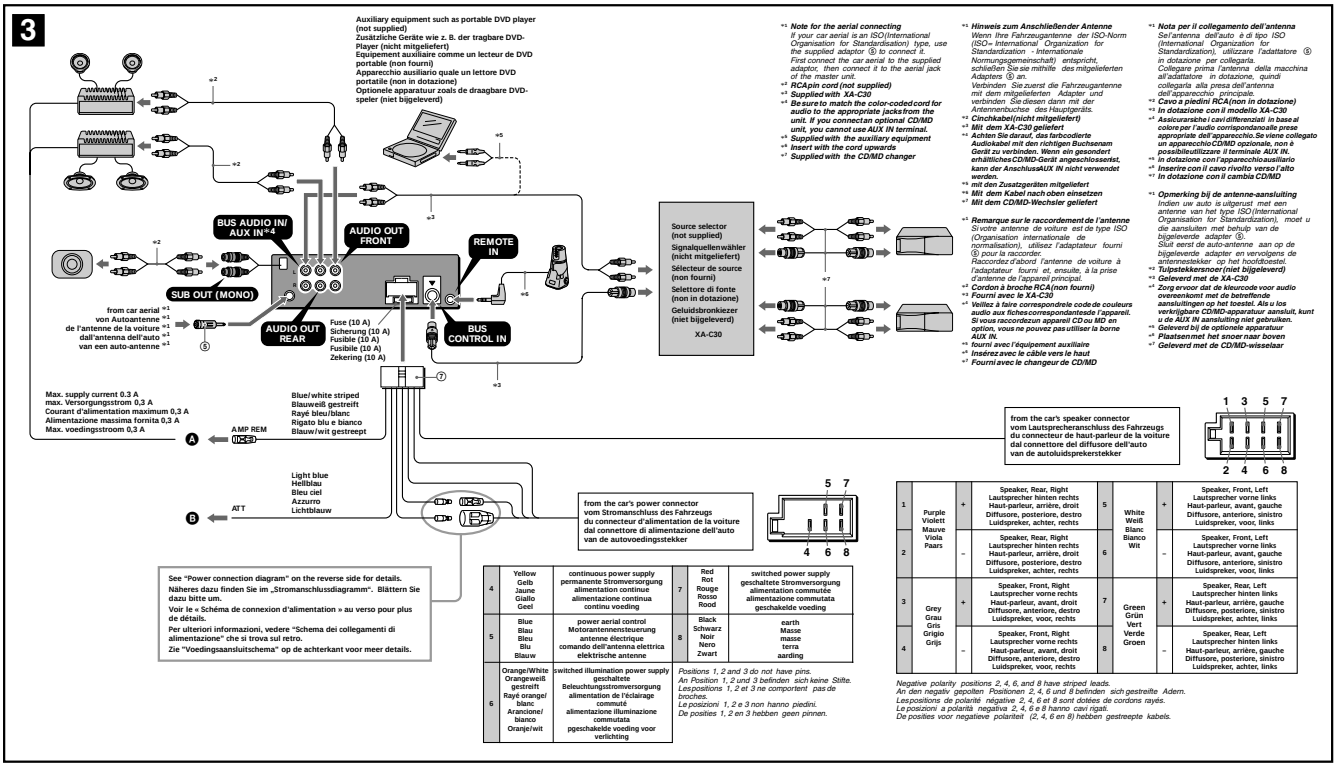

4	Yellow Gelb Jaune Giallo Geel	continuous power supply permanente Stromversorgung alimentation continue alimentazione continua continu voeding	7	Red Rot Rouge Rosso Rood	switched power supply geschaltete Stromversorgung alimentation commutée alimentazione commutata geschakelde voeding
5	Blue Blau Bleu Blu Blauw	power aerial control Motorantennensteuerung antenne électrique comando dell'antenna elettrica elektrische antenne	8	Black Schwarz Noir Nero Zwart	earth Masse masse terra aarding
6	Orange/White Orangeweiß gestreift Rayé orange/ blanc Arancione/ bianco Oranje/wit	switched illumination power supply geschaltete Beleuchtungsstromversorgung alimentation de l'éclairage commuté alimentazione illuminazione commutata geschakelde voeding voor verlichting			

Positions 1, 2 and 3 do not have pins.
An Position 1, 2 und 3 befinden sich keine Stifte.
Les positions 1, 2 et 3 ne comportent pas de broches.
Le posizioni 1, 2 e 3 non hanno piedini.
De posities 1, 2 en 3 hebben geen pinnen.

1	Purple Violett Mauve Viola Paars	+	Speaker, Rear, Right Lautsprecher hinten rechts Haut-parleur, arrière, droit Altoparlante, posteriore, destro Luidspreker, achter, rechts	5	White Weiß Blanc Bianco Wit	+	Speaker, Front, Left Lautsprecher vorne links Haut-parleur, avant, gauche Diffusore, anteriore, sinistro Luidspreker, voor, links
2		–	Speaker, Rear, Left Lautsprecher hinten links Haut-parleur, arrière, droit Diffusore, posteriore, destro Luidspreker, achter, rechts	6		–	Speaker, Front, Left Lautsprecher vorne links Haut-parleur, avant, gauche Diffusore, anteriore, sinistro Luidspreker, voor, links
3	Grey Grau Gris Grigio Grijs	+	Speaker, Front, Right Lautsprecher vorne rechts Haut-parleur, avant, droit Diffusore, anteriore, destro Luidspreker, voor, rechts	7	Green Grün Vert Verde Groen	+	Speaker, Rear, Left Lautsprecher hinten links Haut-parleur, arrière, gauche Diffusore, posteriore, sinistro Luidspreker, achter, links
4		–	Speaker, Front, Right Lautsprecher vorne rechts Haut-parleur, avant, droit Diffusore, anteriore, destro Luidspreker, voor, rechts	8		–	Speaker, Rear, Left Lautsprecher hinten links Haut-parleur, arrière, gauche Diffusore, posteriore, sinistro Luidspreker, achter, links

Negative polarity positions 2, 4, 6, and 8 have striped leads.
An den negativ gepolten Positionen 2, 4, 6 und 8 befinden sich gestreifte Adern.
Les positions de polarité négative 2, 4, 6 et 8 sont dotées de cordons rayés.
Le posizioni a polarità negativa 2, 4, 6 e 8 hanno cavi rigati.
De posities voor negatieve polariteit (2, 4, 6 en 8) hebben gestreepte kabels.

1 **Note for the aerial connecting*
If your car aerial is an ISO(International Organisation for Standardisation) type, use the supplied adaptor Ⓑ to connect it.
First connect the car aerial to the supplied adaptor, then connect it to the aerial jack of the master unit.
2 **RCApin cord (not supplied)*
3 **Supplied with XA-C30*
4 **Be sure to match the color-coded cord for audio to the appropriate jacks from the unit. If you connectan optional CD/MD unit, you cannot use AUX IN terminal.*
5 **Supplied with the auxiliary equipment*
6 **Insert with the cord upwards*
7 **Supplied with the CD/MD changer*

1 **Hinweis zum Anschließender Antenne*
Wenn Ihre Fahrzeugantenne der ISO-Norm (ISO= International Organization for Standardization = Internationale Normungsgemeinschaft) entspricht, schließen Sie sie mithilfe des mitgelieferten Adapters Ⓑ an.
Verbinden Sie zuerst die Fahrzeugantenne mit dem mitgelieferten Adapter und verbinden Sie diesen dann mit der Antennenbuchse des Hauptgeräts.
2 **Cinchkabel(nicht mitgeliefert)*
3 **Mit dem XA-C30 geliefert*
4 **Achten Sie darauf, das farbcodierte Audiokabel mit den richtigen Buchsenam Gerät zu verbinden. Wenn ein gesondert erhältliches CD/MD-Gerät angeschlossenist, kann der AnschlussAUX IN nicht verwendet werden.*
5 **mit den Zusatzgeräten mitgeliefert*
6 **Mit dem Kabel nach oben einsetzen*
7 **Mit dem CD/MD-Wechsler geliefert*

1 **Remarque sur le raccordement de l'antenne*
Si votre antenne de voiture est de type ISO (Organisation internationale de normalisation), utilisez l'adaptateur fourni Ⓑ pour la raccorder.
Raccordez d'abord l'antenne de voiture à l'adaptateur fourni et, ensuite, à la prise d'antenne de l'appareil principal.
2 **Cordon à broche RCA(non fourni)*
3 **Fourni avec le XA-C30*
4 **Veillez à faire correspondrele code de couleurs audio aux fiches correspondantesde l'appareil. Si vous raccordezun appareil CD ou MD en option, vous ne pouvez pas utiliser la borne AUX IN.*
5 **fourni avec l'équipement auxiliaire*
6 **Insérez avec le câble vers le haut*
7 **Fourni avec le changeur de CD/MD*

1 **Nota per il collegamento dell'antenna*
Se l'antenna dell'auto è di tipo ISO (International Organization for Standardization), utilizzare l'adattatore Ⓑ in dotazione per collegarla.
Collegare prima l'antenna della macchina all'adattatore in dotazione, quindi collegarla alla presa dell'antenna dell'apparecchio principale.
2 **Cavo a piedini RCA(non in dotazione)*
3 **In dotazione con il modello XA-C30*
4 **Assicurarsiche i cavi differenziati in base al colore per l'audio corrispondanoalle prese appropriate dell'apparecchio.Se viene collegato un apparecchioCD/MD opzionale, non è possibileutilizzare il terminale AUX IN.*
5 **in dotazione con l'apparecchioausiliario*
6 **Inserire con il cavo rivolto verso l'alto*
7 **In dotazione con il cambia CD/MD*

1 **Opmerking bij de antenne-aansluiting*
Indien uw auto is uitgerust met een antenne van het type ISO (International Organisation for Standardization), moet u die aansluiten met behulp van de bijgeleverde adapter Ⓑ.
Sluit eerst de auto-antenne aan op de bijgeleverde adapter en vervolgens de antennestekker op het hoofdtoestel.
2 **Tulpstekkersnoer(niet bijgeleverd)*
3 **Geleverd met de XA-C30*
4 **Zorg ervoor dat de kleurcode voor audio overeenkomt met de betreffende aansluitingen op het toestel. Als u los verkrijgbare CD/MD-apparatuur aansluit, kunt u de AUX IN aansluiting niet gebruiken.*
5 **Geleverd bij de optionele apparatuur*
6 **Plaatsen met het snoer naar boven*
7 **Geleverd met de CD/MD-wisselaar*

Connection diagram (3)

Ⓐ **To AMP REMOTE IN of an optional power amplifier**
This connection is only for amplifiers. Connecting any other system may damage the unit.

Ⓑ **To the interface cable of a car telephone**

Warning
If you have a power aerial without a relay box, connecting this unit with the supplied power connecting lead ⑦ may damage the aerial.

Notes on the control leads
- *The power aerial control lead (blue) supplies +12 V DC when you turn on the tuner, or when you activate the AF (Alternative Frequency) or TA (Traffic Announcement) function.*
- *When your car has built-in FM/MW/LW aerial in the rear/side glass, connect the power aerial control lead (blue) or the accessorypower input lead (red) to the power terminal of the existing aerial booster. For details, consult your dealer.*
- *A power aerial without a relay box cannot be used with this unit.*

Memory hold connection
When the yellow power input lead is connected, power will always be supplied to the memory circuit even when the ignition switch is turned off.

Notes on speaker connection
- *Before connecting the speakers, turn the unit off.*
- *Use speakers with an impedance of 4 to 8 ohms, and with adequate power handling capacities to avoid its damage.*
- *Do not connect the speaker terminals to the car chassis,or connect the terminals of the right speakers with those of the left speaker.*
- *Do not connect the earth lead of this unit to the negative (–) terminal of the speaker.*
- *Do not attempt to connect the speakers in parallel.*
- *Connect only passive speakers. Connecting active speakers (with built-in amplifiers) to the speaker terminals may damage the unit.*
- *To avoid a malfunction, do not use the built-in speaker leads installed in your car if the unit shares a common negative (–) lead for the right and left speakers.*
- *Do not connect the unit's speaker leads to each other.*

Note on connection
If speaker and amplifier are not connected correctly, "Failure" appears in the display. In this case,make sure the speaker and amplifier are connected correctly.

Anschlussdiagramm (3)

Ⓐ **An AMP REMOTE IN des gesondert erhältlichen Endverstärkers**
Dieser Anschluss ist ausschließlich für Verstärker gedacht.
Schließen Sie nichts anderes daran an. Andernfalls kann das Gerät beschädigt werden.

Ⓑ **An Schnittstellenkabel eines Autotelefons**

Warnung
Wenn Sie eine Motorantenne ohne Relaiskästchen verwenden, kann durch Anschließen dieses Geräts mit dem mitgelieferten Stromversorgungskabel ⑦ die Antenne beschädigt werden.

Hinweise zu den Steuerleitungen
- *Die Motorantennen-Steuerleitung (blau) liefert + 12 V Gleichstrom, wenn Sie den Tuner einschalten oder die AF- (Alternativfrequenzsuche) oder die TA-Funktion (Verkehrsdurchsagen) aktivieren.*
- *Wenn das Fahrzeug mit einer in der Heck-/Seitenfensterscheibe integrierten UKW/MW/LW-Antenne ausgestattet ist, schließen Sie die Motorantennen-Steuerleitung (blau) oder die Zubehörstromversorgungsleitung (rot) an den Stromversorgungsanschluss des vorhandenen Antennenverstärkers an. Näheres dazu erfahren Sie bei Ihrem Händler.*
- *Eskann nur eine Motorantenne mit Relaiskästchen angeschlossen werden.*

Stromversorgung des Speichers
Wenn die gelbe Stromversorgungsleitung angeschlossen ist, wird der Speicher stets (auch bei ausgeschalteter Zündung) mit Strom versorgt.

Hinweise zum Lautsprecheranschluss
- *Schalten Sie das Gerät aus, bevor Sie die Lautsprecher anschließen.*
- *Verwenden Sie Lautsprecher mit einer Impedanz zwischen 4 und 8 Ohm und ausreichender Belastbarkeit. Ansonsten können die Lautsprecher beschädigt werden.*
- *Verbinden Sie die Lautsprecheranschlüsse nicht mit dem Wagenchassis und verbinden Sie auch nicht die Anschlüsse des rechten mit denen des linken Lautsprechers.*
- *Verbinden Sie die Masseleitung dieses Geräts nicht mit dem negativen (–) Lautsprecheranschluss.*
- *Versuchen Sie nicht, Lautsprecher parallel anzuschließen.*
- *An die Lautsprecheranschlüsse dieses Geräts dürfen nur Passivlautsprecher angeschlossen werden. Schließen Sie keine Aktivlautsprecher (Lautsprecher mit eingebauten Verstärkern) an, da das Gerät sonst beschädigt werden könnte.*
- *Um Fehlfunktionen zu vermeiden, verwenden Sie nicht die im Fahrzeug installierten, integrierten Lautsprecherleitungen, wenn eine gemeinsame negative (–) Leitung für den rechten und den linken Lautsprecher verwendet wird.*
- *Verbinden Sie nicht die Lautsprecherkabel des Geräts miteinander.*

Hinweis zum Anschließen
Wenn Lautsprecher und Verstärker nicht richtig angeschlossen sind, erscheint „Failure" im Display. Vergewissern Sie sich in diesem Fall, dass Lautsprecher und Verstärker richtig angeschlossen sind.

Schéma de raccordement (3)

Ⓐ **Au niveau du AMP REMOTE IN d'un amplificateur de puissance facultatif**
Ce raccordement existe seulement pour les amplificateurs. Le raccordement à tout autre système peut endommager l'appareil.

Ⓑ **Vers le cordon de liaison d'un téléphone de voiture**

Avertissement
Si vous disposez d'une antenne électrique sans boîtier de relais, le branchement de cet appareil au moyen du cordon d'alimentation fourni ⑦ risque d'endommager l'antenne.

Remarques sur les fils de commande
- *Le fil de commande (bleu) fournit du courant continu de +12 V lorsque vous mettez le tuner sous tension ou lorsque vous activez la fonction AF (fréquence alternative) ou TA (informations circulation).*
- *Lorsque votre voiture est équipée d'une antenne FM/MW (PO)/LW (GO) intégrée dans la vitre arrière/latérale, raccordez le fil de commande de l'antenne (bleu) ou l'entrée d'alimentation des accessoires (rouge) au bornier de l'amplificateur d'antenne existant. Pour plus de détails, consultez votre revendeur.*
- *Une antenne électrique sansboîtier de relais ne peut pas être utilisée avec cet appareil.*

Raccordementpour la conservation de la mémoire
Lorsque le fil d'entrée d'alimentation jaune est connecté, le circuit de la mémoire est alimenté en permanence même si la clé de contact est en position d'arrêt.

Remarques sur le raccordement des haut-parleurs
- *Avant de raccorder les haut-parleurs, mettre l'appareil hors tension.*
- *Utiliser des haut-parleurs ayant une impédance de 4 à 8 ohms et une capacité adéquate sous peine de les endommager.*
- *Ne pas raccorder les bornes du système de haut-parleurs au châssis de la voiture et ne pas connecter les bornes du haut-parleur droit à celles du haut-parleur gauche.*
- *Ne pas raccorder le câble de masse de cet appareil à la borne négative (–) du haut-parleur.*
- *Ne pas tenter de raccorder les haut-parleurs en parallèle.*
- *Ne pas connecter d'enceintes acoustiques actives (avec amplificateurs intégrés) aux bornes d'enceinte de cet appareil, pour éviter d'endommager l'appareil. Veiller à raccorder des enceintes passivesuniquement.*
- *Pour éviter tout dysfonctionnement, n'utilisez pas les fils des haut-parleurs intégrés installés dans votre voiture si l'appareil dispose d'un fil négatif commun (–) pour les haut-parleurs droit et gauche.*
- *Ne raccordez pas entre eux les cordons des haut-parleurs de l'appareil.*

Remarque sur le raccordement
Si les enceintes et l'amplificateur ne sont pas raccordés correctement, le message « Failure » s'affiche. Dans ce cas, assurez-vous que les enceintes et l'amplificateur sont raccordés correctement.

Schema di collegamento (3)

Ⓐ **A AMP REMOTE IN di un amplificatore di potenza opzionale**
Questo collegamento è riservato esclusivamente agli amplificatori. Non collegare un tipo di sistema diverso onde evitare di causare danni all'apparecchio.

Ⓑ **Al cavo di interfaccia di un telefono per auto**

Avvertenza
Quando si collega l'apparecchio con il cavo di alimentazione in dotazione ⑦, si potrebbe danneggiare l'antenna elettrica sequesta è priva di scatola a relè.

Note sui cavi di controllo
- *Il cavo (blu) di controllo dell'antenna elettrica fornisce alimentazione pari a +12 V CCquando si attiva il sintonizzatore oppure la funzione TA (notiziario sul traffico) o AF (frequenza alternativa).*
- *Se l'automobile è dotata di antenna FM/MW/LW incorporata nel vetro posteriore/laterale, collegare il cavo (blu) di controllo dell'antenna elettrica o il cavo (rosso) di ingresso dell'alimentazione accessoriAl terminale di alimentazione del preamplificatore dell'antenna esistente. Per ulteriori informazioni, consultare il proprio fornitore.*
- *Non è possibile usare un'antenna elettrica senza scatola a relè con questo apparecchio.*

Collegamento per la conservazionedella memoria
Quando il cavo di ingresso alimentazione giallo è collegato, viene sempre fornita alimentazione al circuito di memoria anche quando l'interruttore di accensione è spento.

Note sul collegamento dei diffusori
- *Prima di collegare i diffusori spegnere l'apparecchio.*
- *Usare diffusori di impedenza compresa tra 4 e 8 ohm e con capacità di potenza adeguata, altrimenti i diffusori potrebbero venire danneggiati.*
- *Non collegare i terminali del sistema diffusori al telaio dell'auto e non collegare i terminali del diffusore destro a quelli del diffusore sinistro.*
- *Non collegare il cavo di terra di questo apparecchio al terminale negativo (–) del diffusore.*
- *Non collegare i diffusori in parallelo.*
- *Assicurarsi di collegare soltanto diffusori passivi, poiché il collegamento di diffusori attivi, dotati di amplificatori incorporati, ai terminali dei diffusori potrebbe danneggiare l'apparecchio.*
- *Per evitare problemi di funzionamento, non utilizzare i cavi dei diffusori incorporati installati nell'automobile se l'apparecchio condivide un cavo comune negativo (–) per i diffusori destro e sinistro.*
- *Non collegare fra loro i cavi dei diffusori dell'apparecchio.*

Nota sui collegamenti
Se l'amplificatore e il diffusore non sono collegati correttamente, "Failure" viene visualizzato nel display. In tal caso, accertarsi che l'amplificatore e il diffusore siano collegati correttamente.

Aansluitschema (3)

Ⓐ **Naar AMP REMOTE IN van een optionele vermogensversterker**
Deze aansluiting is alleen bedoeld voor versterkers. Door een ander systeem aan te sluiten kan het apparaat worden beschadigd.

Ⓑ **Naar het interface-snoer van een autotelefoon**

Opgelet
Indien u een elektrische antenne hebt zonder relaiskast, kan het aansluiten van deze eenheid met het bijgeleverde netsnoer ⑦ de antenne beschadigen.

Opmerkingen betreffende de aansluitsnoeren
- *De antennevoedingskabel (blauw) levert +12 V gelijkstroom wanneer u de tuner inschakelt of de AF (Alternative Frequency) of TA (Traffic Announcement) functie activeert.*
- *Wanneer uw auto is uitgerust met een FM/MW/LW-antenne in de achterruit/voorruit, moet u de antennevoedingskabel (blauw) of de hulpvoedingskabel (rood) aansluiten op de voedingsingang van de bestaande antenneversterker. Raadpleeg uw dealer voor meer details.*
- *Met dit apparaat is het niet mogelijk een automatische antenne zonder relaiskast te gebruiken.*

Instandhouden van het geheugen
Zolang de gele voedingskabel is aangesloten, blijft de stroomvoorziening van het geheugen intact, ook wanneer het contact van de auto wordt uitgeschakeld.

Opmerkingen betreffende het aansluiten van de luidsprekers
- *Zorg dat het apparaat is uitgeschakeld, alvorens de luidsprekers aan te sluiten.*
- *Gebruik luidsprekers met een impedantie van 4 tot 8 Ohm en let op dat die het vermogen van de versterker kunnen verwerken. Als dit wordt verzuimd, kunnen de luidsprekers ernstig beschadigd raken.*
- *Verbind in geen geval de aansluitingen van de luidsprekers met het chassisvan de auto en sluit de aansluitingen van de rechter en linker luidspreker niet op elkaar aan.*
- *Verbind de aardingskabel van dit apparaat niet met de negatieve (–) aansluiting van de luidspreker.*
- *Probeer nooit de luidsprekers parallel aan te sluiten.*
- *Sluit geen actieve luidsprekers (met ingebouwde versterkers) aan op de luidspreker-aansluiting van dit apparaat. Dit zal leiden tot beschadiging van het apparaat. Sluit dus altijd uitsluitend luidsprekers zonder ingebouwde versterker aan.*
- *Om defecten te vermijden mag u de bestaande luidsprekerbedrading in uw auto niet gebruiken wanneer er een gemeenschappelijke negatieve (–) draad is voor de rechter en linker luidsprekers.*
- *Verbind de luidsprekerdraden niet met elkaar.*

Opmerking over aansluiten
Als de luidspreker en versterker niet correct zijn aangesloten, wordt "Failure" in het display weergegeven. In dit geval moet u zorgen dat de luidspreker en versterker correct zijn aangesloten.

Connections (E Model)

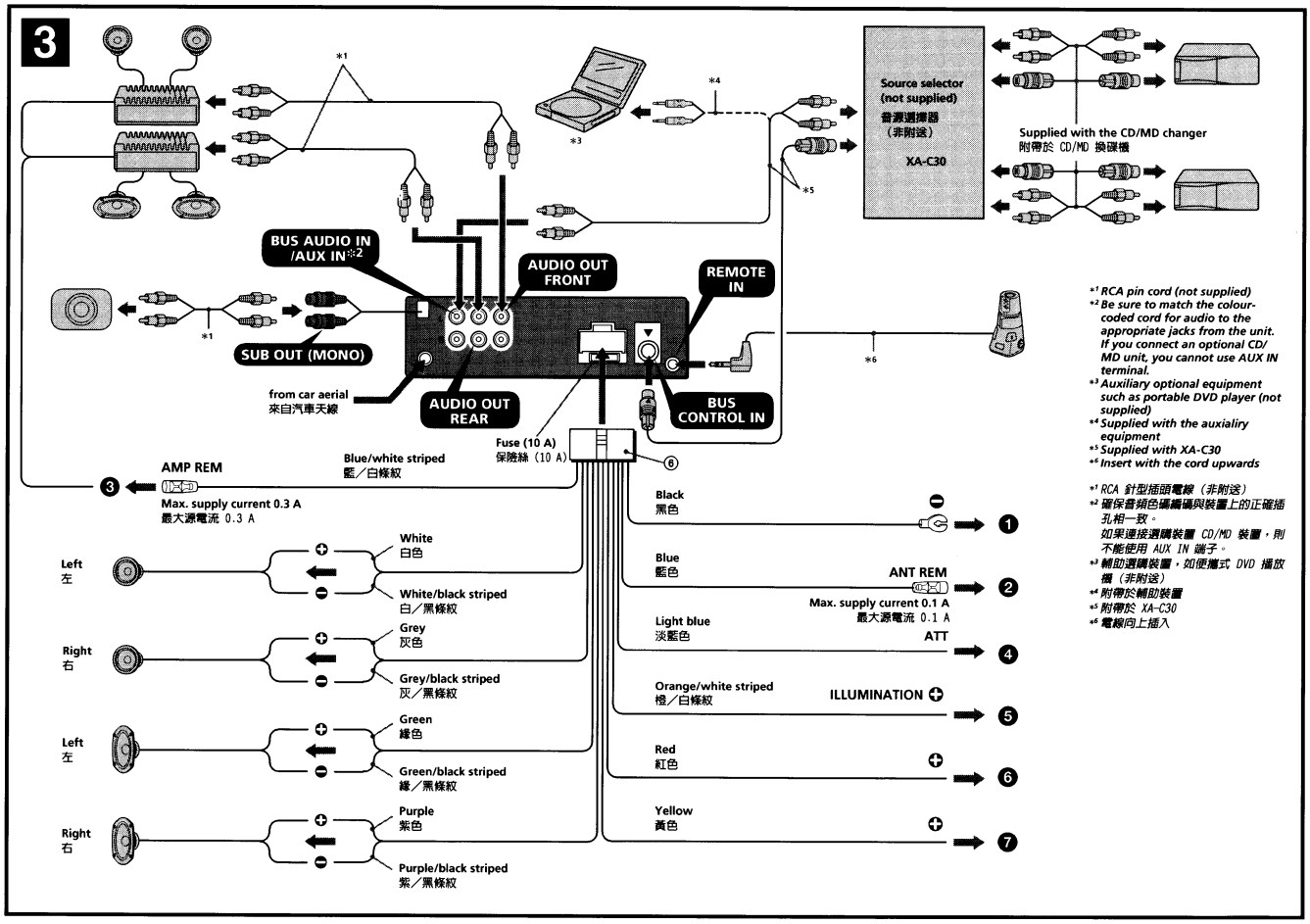

*1 RCA pin cord (not supplied)
*2 Be sure to match the colour-coded cord for audio to the appropriate jacks from the unit. If you connect an optional CD/MD unit, you cannot use AUX IN terminal.
*3 Auxiliary optional equipment such as portable DVD player (not supplied)
*4 Supplied with the auxiliary equipment
*5 Supplied with XA-C30
*6 Insert with the cord upwards

*1 RCA 針型插頭電線（非附送）
*2 確保音頻色碼編碼與裝置上的正確插孔相一致。
如果連接選購裝置 CD/MD 裝置，則不能使用 AUX IN 端子。
*3 輔助選購裝置，如便攜式 DVD 播放機（非附送）
*4 附帶於輔助裝置
*5 附帶於 XA-C30
*6 電線向上插入

Connection diagram (3)

❶ **To a metal surface of the car**
First connect the black earth lead, then connect the yellow and red power input leads.

❷ **To the power aerial control lead or power supply lead of aerial booster amplifier**
Notes
- *It is not necessary to connect this lead if there is no power aerial or aerial booster, or with a manually-operated telescopic aerial.*
- *When your car has a built-in FM/MW/LW aerial in the rear/side glass, see "Notes on the control and power supply leads."*

❸ **To AMP REMOTE IN of an optional power amplifier**
This connection is only for amplifiers. Connecting any other system may damage the unit.

❹ **To the interface cable of a car telephone**

❺ **To a car's illumination signal**
Be sure to connect the black earth lead to a metal surface of the car first.

❻ **To the +12 V power terminal which is energised in the accessory position of the ignition key switch**
Notes
- *If there is no accessory position, connect to the +12 V power (battery) terminal which is energised at all times.*
  Be sure to connect the black earth lead to a metal surface of the car first.
- *When your car has a built-in FM/MW/LW aerial in the rear/side glass, see "Notes on the control and power supply leads."*

❼ **To the +12 V power terminal which is energised at all times**
Be sure to connect the black earth lead to a metal surface of the car first.

Notes on the control and power supply leads
- *The power aerial control lead (blue) supplies +12 V DC when you turn on the tuner or when you activate the AF (Alternative Frequency), TA (Traffic Announcement) function.*
- *When your car has built-in FM/MW/LW aerial in the rear/side glass, connect the power aerial control lead (blue) or the accessory power input lead (red) to the power terminal of the existing aerial booster. For details, consult your dealer.*
- *A power aerial without relay box cannot be used with this unit.*

Memory hold connection
When the yellow power input lead is connected, power will always be supplied to the memory circuit even when the ignition switch is turned off.

Notes on speaker connection
- *Before connecting the speakers, turn the unit off.*
- *Use speakers with an impedance of 4 to 8 ohms, and with adequate power handling capacities to avoid its damage.*
- *Do not connect the speaker terminals to the car chassis, or connect the terminals of the right speakers with those of the left speaker.*
- *Do not connect the earth lead of this unit to the negative (–) terminal of the speaker.*
- *Do not attempt to connect the speakers in parallel.*
- *Connect only passive speakers. Connecting active speakers (with built-in amplifiers) to the speaker terminals may damage the unit.*
- *To avoid a malfunction, do not use the built-in speaker leads installed in your car if the unit shares a common negative (–) lead for the right and left speakers.*
- *Do not connect the unit's speaker leads to each other.*

Note on connection
If speaker and amplifier are not connected correctly, "Failure" appears in the display. In this case, make sure the speaker and amplifier are connected correctly.

線路連接圖（3）

❶ **連接至汽車的金屬表面**
首先連接黑色接地導線，然後再連接黃色和紅色電源輸入導線。

❷ **連接至電動天線控制導線或天線升壓放大器的電源導線**
註
- *如無電動天線，天線升壓器，或有手動套管式天線，便不須連接此導線。*
- *您汽車的後／側玻璃窗中如果有內置 FM/MW/LW 天線，即請參看“控制線和電源線須知”。*

❸ **連接至選購的功率放大器的 AMP REMOTE IN（放大器遙控輸入）**
本連接僅用於放大器。連接任何其它系統可能會損壞本機。

❹ **連接至汽車電話的接口電纜**

❺ **至汽車照明明訊號**
務請首先將黑色接地導線連接至汽車的金屬表面。

❻ **連接至在點火鑰匙開關的附件位置上通電的 +12 V 電源端子**
註
- *若沒有附件位置，則請連接至始終通電的 +12 V 電源（電池）端子。*
  必須首先將黑色接地導線連接至汽車的金屬表面。
- *您汽車的後／側玻璃窗中如果有內置 FM/MW/LW 天線，即請參看“控制線和電源線須知”。*

❼ **連接至始終通電的 +12 V 電源端子**
必須首先將黑色接地導線連接至汽車的金屬表面。

控制線和電源線須知
- *當您打開調諧器或啓動 AF（變換頻率）或 TA（交通公告）功能時，電源天線控制導線（藍色）提供 +12 V 直流電。*
- *若您的汽車後／側玻璃窗上有內置 FM/MW/LW 天線，須將電動天線控制導線（藍色）或輔助電源輸入導線（紅色）連接到現有天線升壓器上的電源端子上。詳細內容請向銷售商諮詢。*
- *本機不能使用不具備繼電器盒的電動天線。*

保持記憶的線路連接法
當連接好黃色電源輸入導線時，即使汽車發動機點火開關關閉，電源仍將對記憶電路供電。

連接揚聲器時的注意事項
- *連接揚聲器電線以前，請先關閉本機電源。*
- *使用阻抗爲 4–8Ω 且具有足夠功率處理容量的揚聲器，以免損壞揚聲器。*
- *不要將揚聲器端子連接到車身上，或將右揚聲器端子與左揚聲器端子相連接。*
- *切勿將本機的接地導線連接至揚聲器的負(–)接線端。*
- *揚聲器不可並聯連接。*
- *請僅連接無源揚聲器。若將有源揚聲器（帶內置放大器）連接到揚聲器端子上會損壞本機。*
- *若本裝置使用左、右揚聲器的共用負極(–)導線，爲了避免故障，切勿使用已安裝在汽車內的內置揚聲器導線。*
- *請勿將本裝置揚聲器導線相互連接。*

有關連接注意事項
如果未正確連接揚聲器和放大器，則顯示幕上會出現“Failure”。此時，請正確連接揚聲器和放大器。

SECTION 2
DISASSEMBLY

Note : This set can be disassemble according to the following sequence.

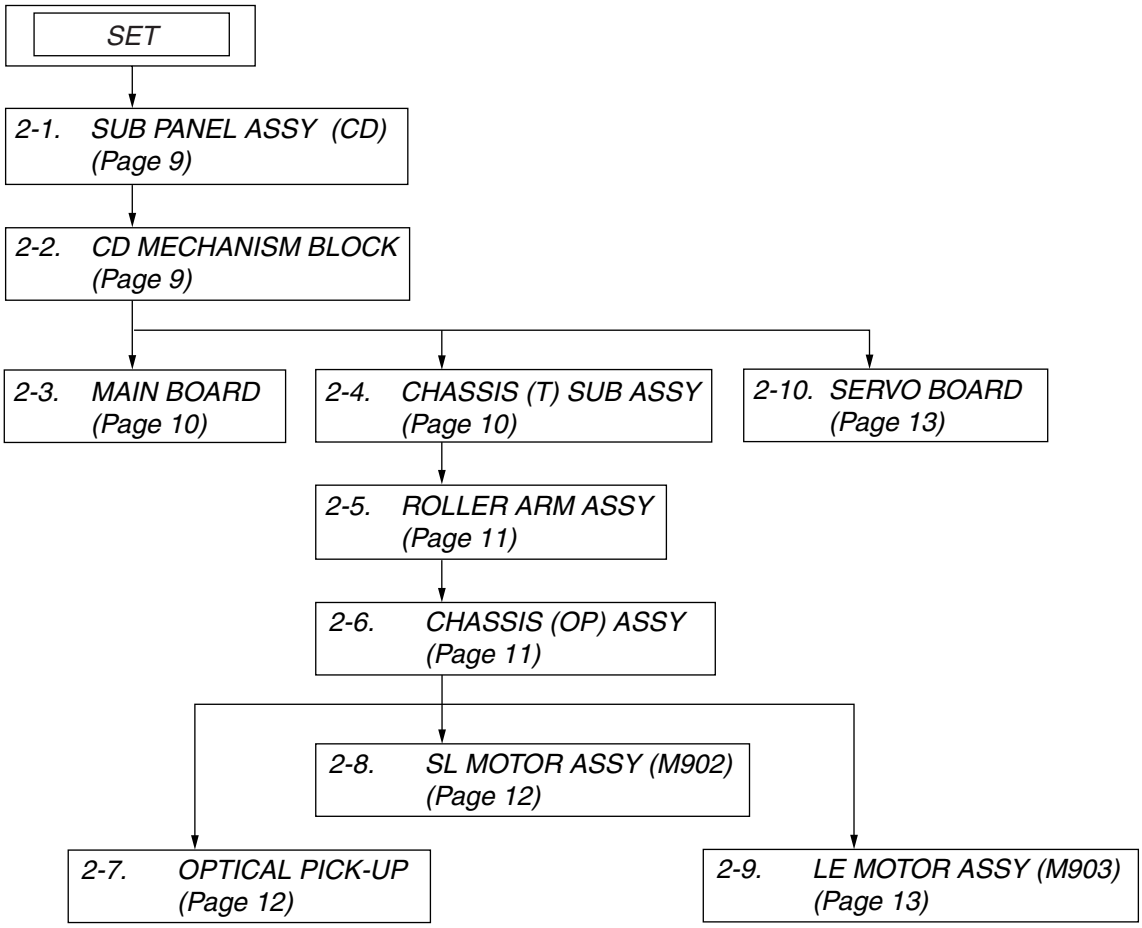

Note : Follow the disassembly procedure in the numerical order given.

2-1. SUB PANEL ASSY (CD)

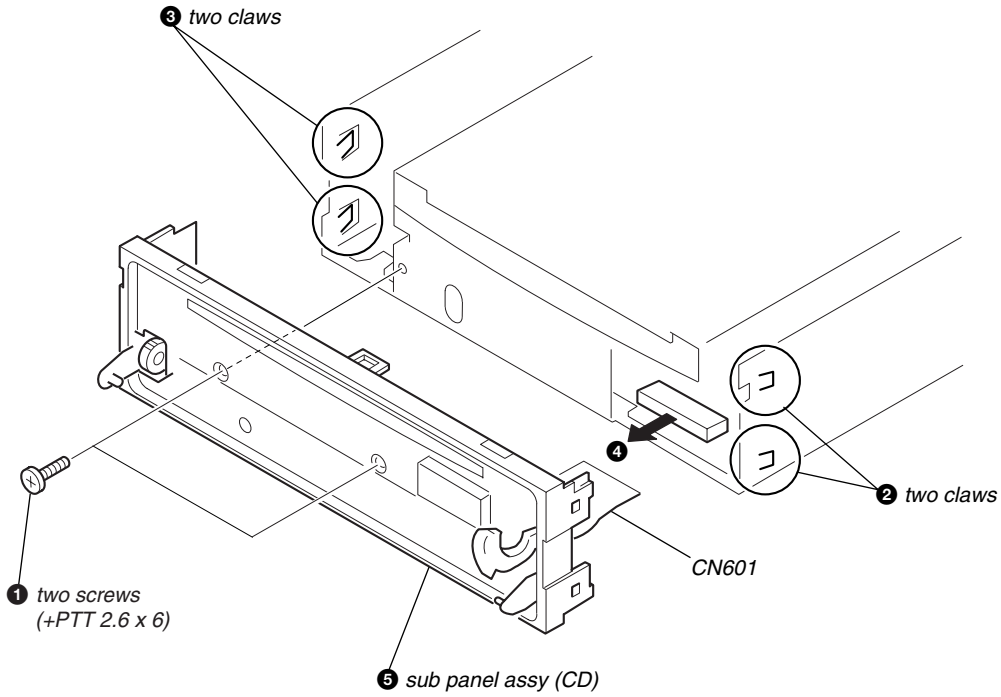

2-2. CD MECHANISM BLOCK

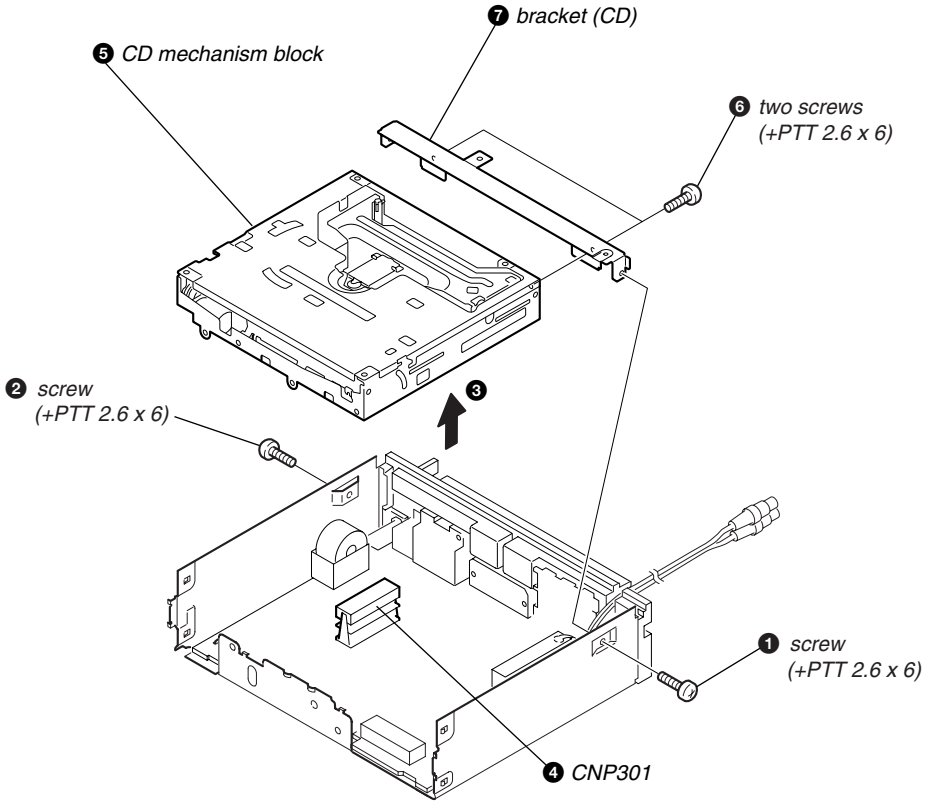

2-3. MAIN BOARD

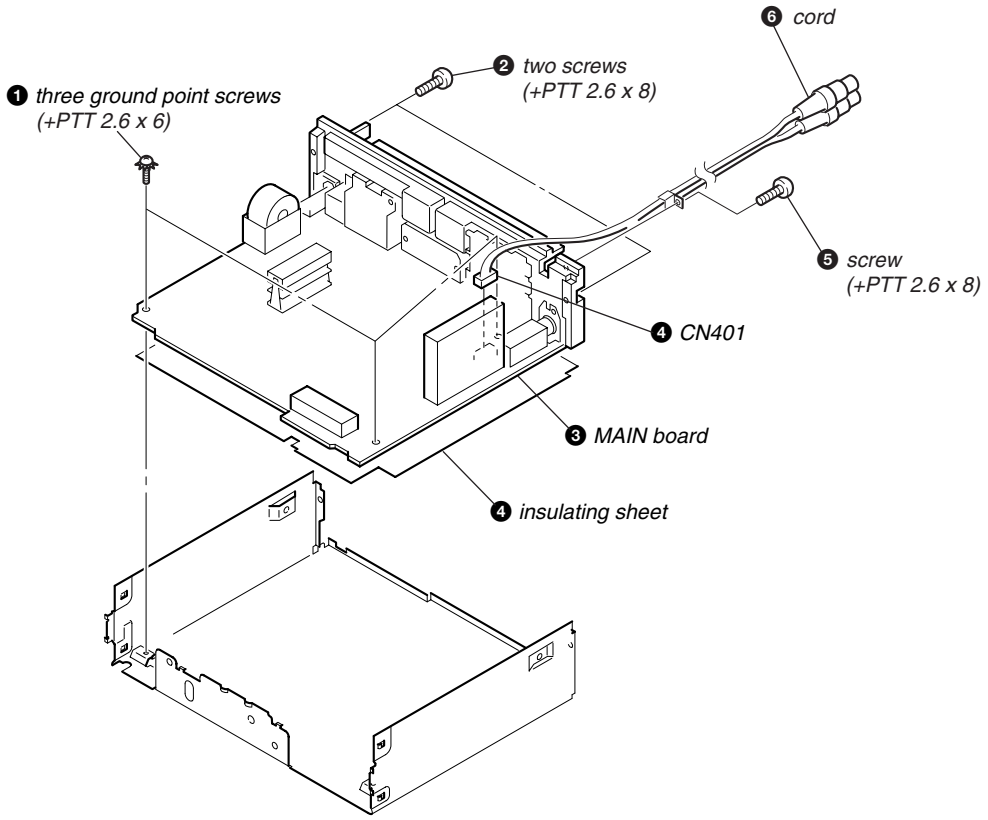

2-4. CHASSIS (T) SUB ASSY

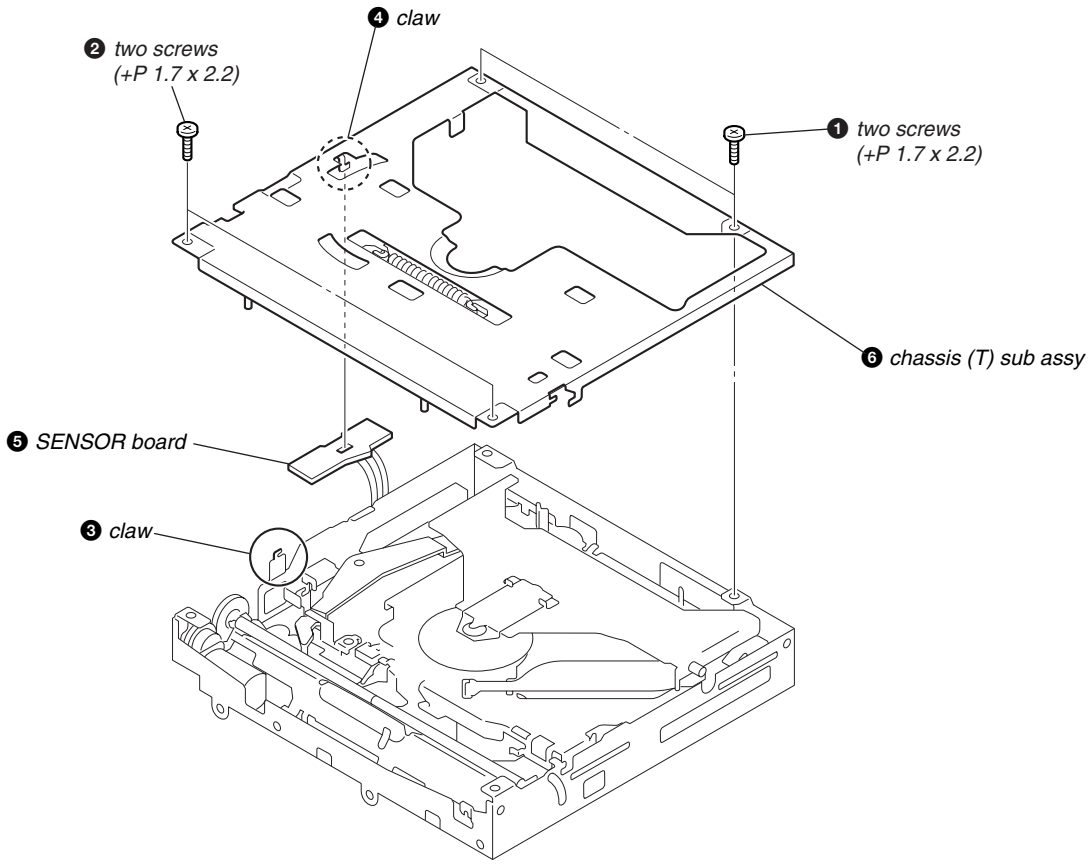

2-5. ROLLER ARM ASSY

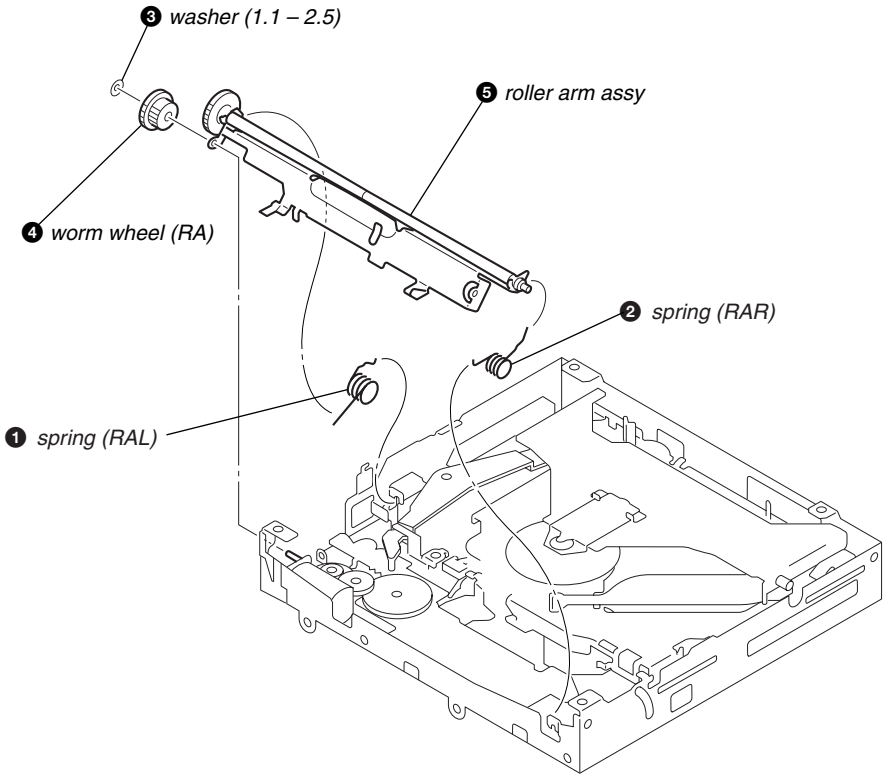

2-6. CHASSIS (OP) ASSY

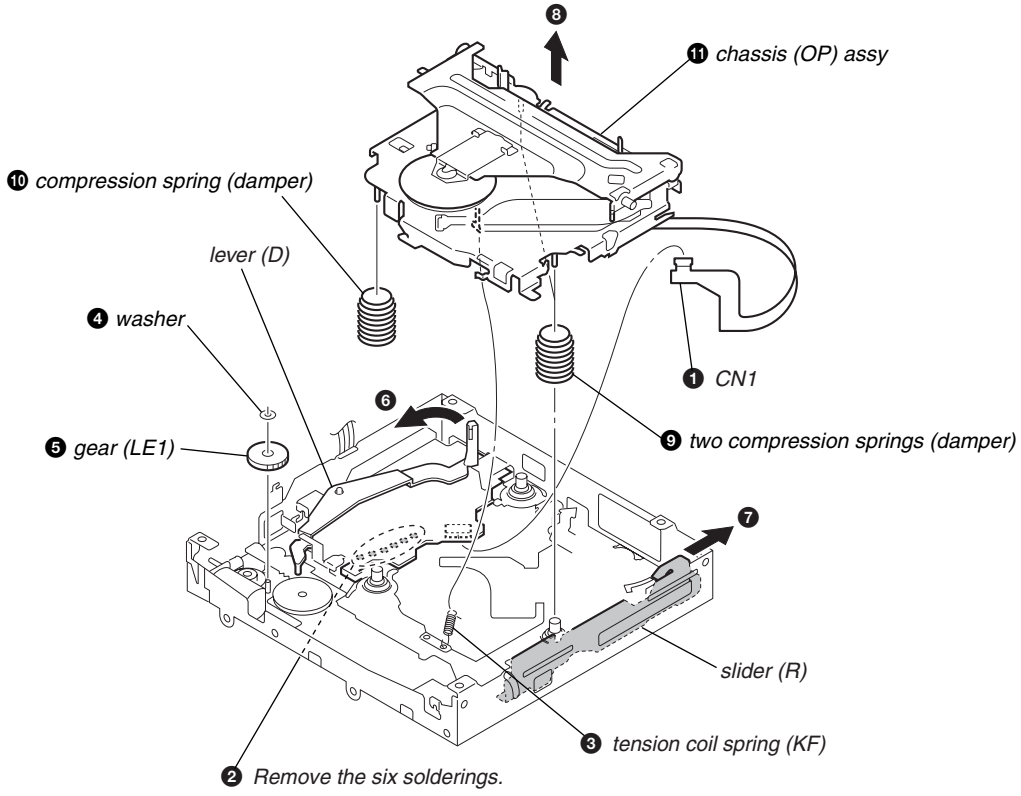

2-7. OPTICAL PICK-UP

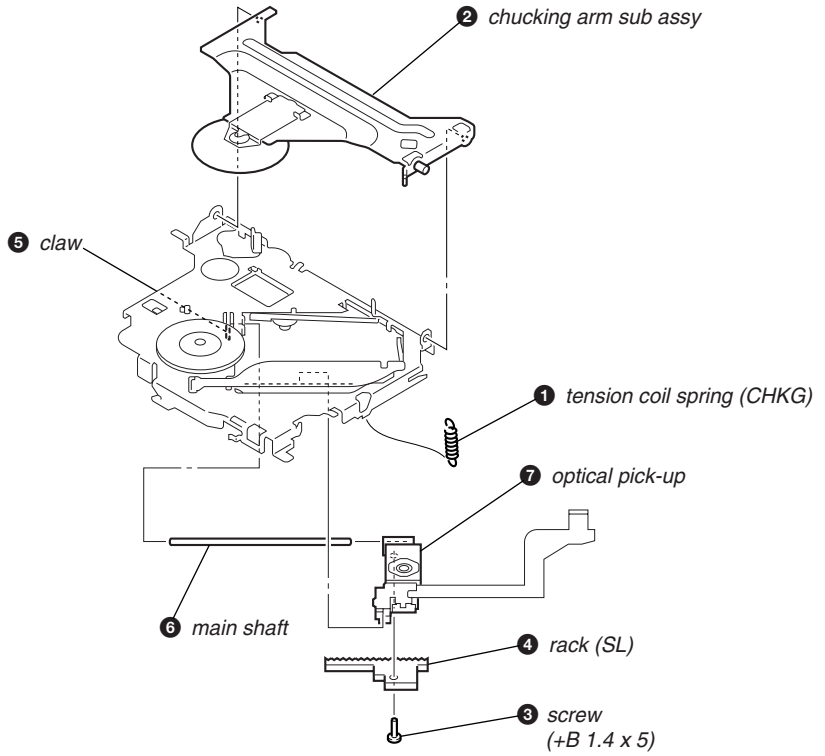

2-8. SL MOTOR ASSY (M902)

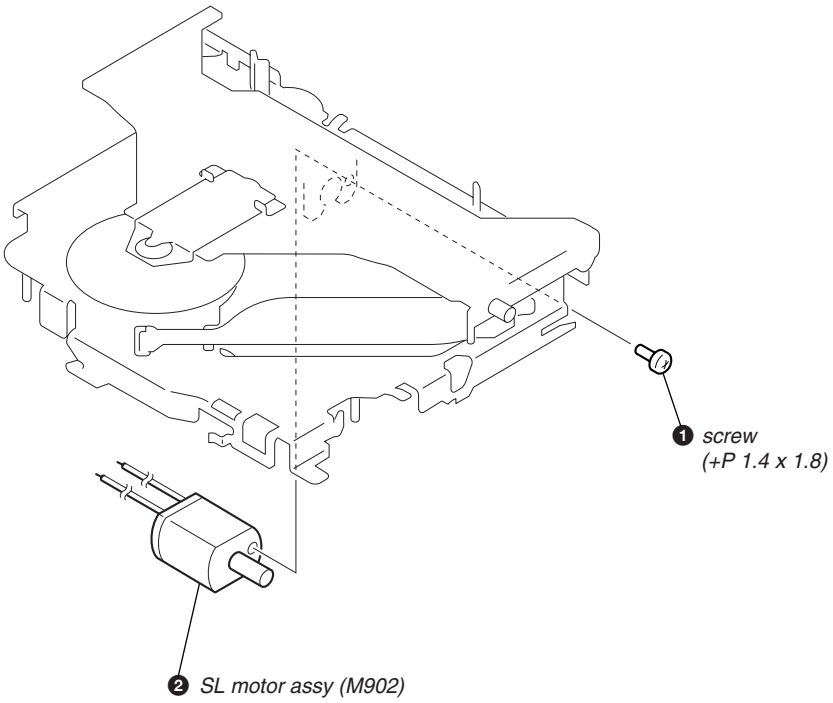

2-9. LE MOTOR ASSY (M903)

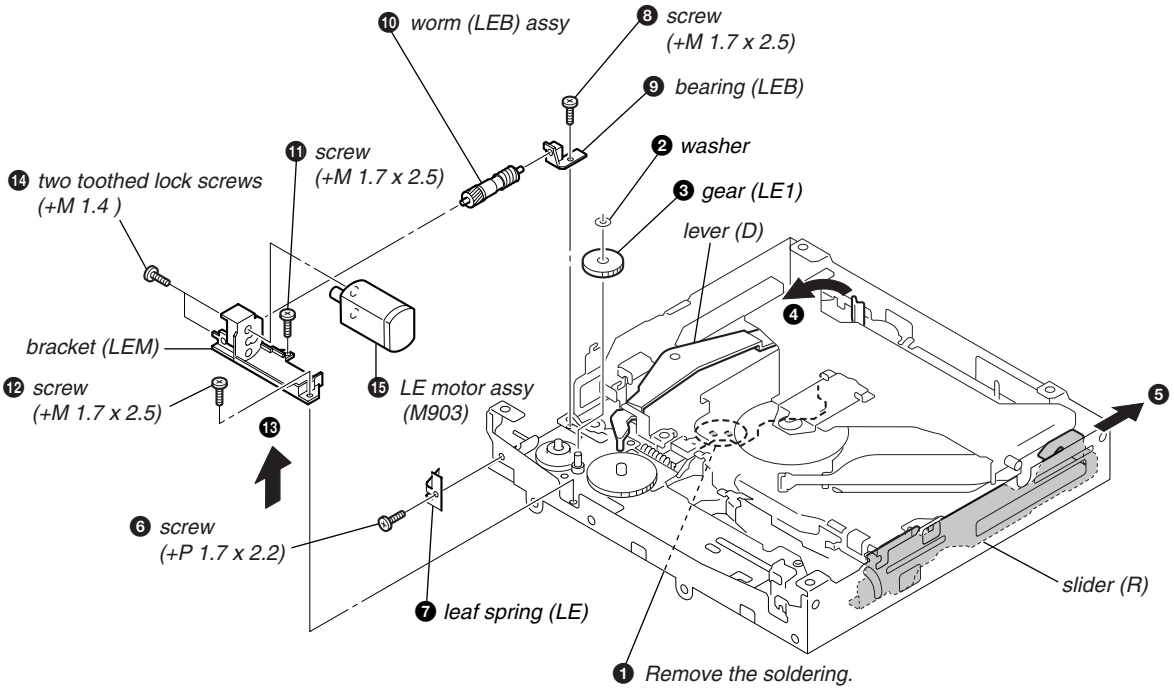

2-10. SERVO BOARD

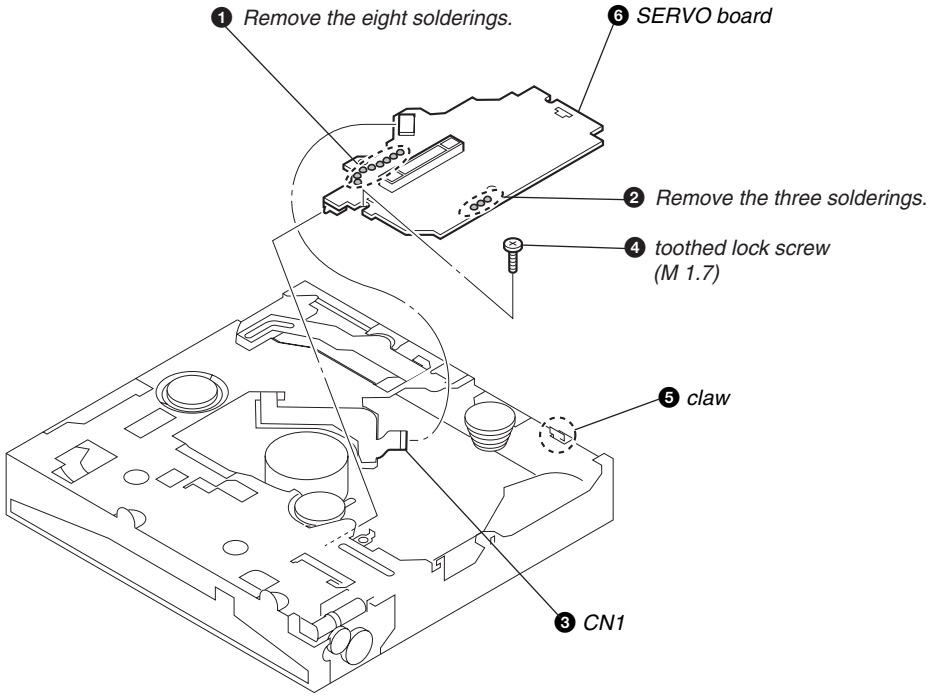

SECTION 3
DIAGRAMS

3-1. IC PIN DESCRIPTIONS

• IC3 CXD3059BR (DIGITAL SERVO/DIGITAL SIGNAL PROCESSOR) (SERVO BOARD (1/2))

Pin No.	Pin Name	I/O	Pin Description
1	MIRR	I/O	Mirrer signal input/output
2	DFCT	I/O	Defect signal input/output
3	FOK	I/O	Focus OK signal input/output
4	VSS	—	Ground pin
5	LOCK	I/O	Not used in this set. (Open)
6	MDP	O	Spindle motor servo control signal output
7	SSTP	I	Disc most inner detection signal input
8	IOVSS1	—	Digital ground pin for I/O
9	SFDR	O	Sled drive signal output
10	SRDR	O	Sled drive signal output
11	TFDR	O	Tracking drive signal output
12	TRDR	O	Tracking drive signal output
13	FFDR	O	Focus drive signal output
14	FRDR	O	Focus drive signal output
15	IOVDD1	—	Digital power supply pin for I/O
16	AVDD0	—	Analog power supply pin for I/O
17	AVSS0	—	Analog ground pin
18	NC	—	Not used. (Open)
19	E	I	E signal input
20	F	I	F signal input
21	TEI	I	Tracking error signal input from the DSSP block
22	TEO	O	Tracking error signal output to the RF amp block
23	FEI	I	Focus error signal input from the DSSP block
24	FEO	O	Focus error signal output form the RF amp block
25	VC	I/O	VC voltage output to the RF amp block Center voltage input from the DSSP block by command select
26	A	I	A signal input
27	B	I	B signal input
28	C	I	C signal input
29	D	I	D signal input
30	NC	—	Not used. (Open)
31	AVDD4	—	Analog power supply pin
32	RFDCO	I/O	RFDC signal output RFDC signal input from the DSSP block by command select
33	PDSENS	I	Reference voltage input for PD
34	AC SUM	O	RFAC suming amp signal output
35	EQ IN	I	Equalizer circuit signal input
36	LD	O	APC amp signal output
37	PD	I	APC amp signal input
38	NC	—	Not used. (Open)
39	RFC	I	EQ cut off frequency adjustment input
40	AVSS4	—	Analog ground pin
41	RFACO	O	RFAC signal output
42	RFACI	I	RFAC signal input or EFM signal input
43	AVDD3	—	Analog power supply pin
44	BIAS	I	Asymmetry circuit constant current input
45	ASYI	I	Asymmetry comparate voltage input
46	ASYO	O	EFM full swing signal output
47	VPCO	O	Charge pomp output for wideband EFM PLL
48	VCTL	I	VCO2 control voltage input for wideband EFM PLL
49	AVSS3	—	Analog ground pin

Pin No.	Pin Name	I/O	Pin Description
50	CLTV	I	VCO1 control voltage input
51	FILO	O	Filter signal output for master PLL
52	FILI	I	Filter signal input for master PLL
53	PCO	O	Charge pomp output for master PLL
54	AVDD5	—	Analog power supply pin
55	DDVROUT	O	DC/DC converter output
56	DDVRSEN	I	DC/DC converter output voltage monitor signal input
57	AVSS5	—	Analog ground pin
58	DDCR	I	Reset signal input for DC/DC converter
59	NC	—	Not used. (Open)
60	BCKI	I	D/A interface bit clock signal input
61	PCMDI	I	D/A interface serial data signal input
62	LRCKI	I	D/A interface LR clock signal input
63	LRCK	O	D/A interface LR clock signal output
64	VSS	—	Digital ground pin for internal
65	PCMD	O	D/A interface serial data signal output
66	BCK	O	D/A interface bit clock signal output
67	VDD	—	Digital power supply pin for internal
68	EMPH	O	Not used in this set. (Open)
69	EMPHI	I	Not used in this set. (Fixed at “L”.)
70	IOVDD2	—	Digital power supply pin for I/O
71	DOUT	O	Digital out signal output
72, 73	TEST	I	Test pin Normally “L”.
74	IOVSS2	—	Digital ground pin for I/O
75	NC	—	Not used in this set. (Open)
76	XVSS	—	Ground pin for master clock
77	XTAO	O	Crystal oscillation circuit output (16.9344 MHz)
78	XTAI	I	Crystal oscillation circuit input (16.9344 MHz)
79	XVDD	—	Power supply pin for master clock
80	AVDD1	—	Analog power supply pin
81	AOUT1	O	L channel analog signal output
82	VREFL	O	L channel reference voltage output
83	AVSS1	—	Analog ground pin
84	AVSS2	—	Analog ground pin
85	VREFR	O	R channel reference voltage output
86	AOUT2	O	R channel analog signal output
87	AVDD2	—	Analog power supply pin
88	NC	—	Not used. (Open)
89	IOVDD0	—	Digital power supply pin for I/O
90	RMUT	O	R channel “O” detection flug output
91	LMUT	O	L channel “O” detection flug output
92	NC	—	Not used. (Open)
93	XTSL	I	X’tal select signal input 16.9344 MHz: “L”, 33.8688 MHz: “H”
94	IOVSS0	—	Digital ground pin for I/O
95	XTACN	I	Oscillation circuit control input “H”: Oscillation start, “L”: Oscillation stop
96	SQSO	O	Sub 80 bit and PCM peak, level data signal output CD text data signal output
97	SQCK	I	Clock signal input for SQSO read out
98	SBSO	O	Sub P-W serial data signal output Not used in this set. (Open)
99	EXCK	I	Clock signal input for SBSO read out Not used in this set. (Open)
100	XRST	I	System reset signal input “L”: reset
101	SYSM	I	Mute signal input “H”: mute Not used in this set. (Fixed at “L”.)
102	DATA	I	Serial data signal input
103	VSS	—	Digital ground pin for internal

Pin No.	Pin Name	I/O	Pin Description
104	XLAT	I	Latch signal input
105	CLOK	I	Serial data transfer clock signal input
106	VDD	—	Digital power supply pin for internal
107	SENS	O	SENS signal output
108	SCLK	I	Clock signal input for SENS serial data read out
109	ATSK	I/O	Input/output for anti-shock
110	WFCK	O	WFCK signal output Not used in this set. (Open)
111	XUGF	O	XUGF signal output Not used in this set. (Open)
112	XPCK	O	XPCK signal output Not used in this set. (Open)
113	GFS	O	GFS signal output
114	C2PO	O	C2PO signal output
115	SCOR	O	Sub cord sync signal output
116	VDD	—	Digital power supply pin for internal
117	C4M	O	4.2336 MHz signal output Not used in this set. (Open)
118	WDCK	O	Word clock signal output Not used in this set. (Open)
119	COUT	I/O	Track count signal input/output Not used in this set. (Open)
120	NC	—	Not used. (Open)

• IC303 M30624MGP-123GP (SYSTEM CONTROL) (MAIN BOARD (3/3))

Pin No.	Pin Name	I/O	Pin Description
1	SIRCS	I	Remocon data input
2	(NCO)	O	Not used
3	CD SO/TSO	O	CD servo serial data output
4	CD SI/TSI	I	CD servo serial data input
5	CD CKO/TCKO	O	CD servo serial clock output
6	BYTE	I	Connecting to ground.
7	CNVSS	I	Flash write-in signal input
8	XCIN	I	Sub clock signal input (32.768kHz)
9	XCOUT	O	Sub clock signal output (32.768kHz)
10	RESET	I	CPU reset input
11	XOUT	O	Main clock signal output (6MHz)
12	VSS	—	Ground
13	XIN	I	Main clock signal input (6MHz)
14	VCC1	—	Ground
15	NMI	I	Non maskable interrupt signal input
16	CD INTQ	I	CD-TEXT sync. signal input
17	DAVN	I	RDS data block sync. detection signal input
18	BU IN	I	Back-up power detection signal input
19	NS MASK	O	NS-MASK signal output
20	BEEP	O	Beep signal output
21	FSW IN	I	DD converter OSC frequency count input
22	FSW OUT	O	DD converter OSC frequency change output
23	SA CLK	O	Spectrum analyzer clock output
24	TEL ATT	I	Telephone mute signal input
25	ATT	O	Mute signal output
26	VOL ATT	O	Electronic volume mute signal output
27	I2C CKO	O	I2C bus serial clock output
28	I2C SIO	O	I2C bus serial data output
29	UNI SO	O	SONY bus serial data output
30	UNI SI	I	SONY bus serial data input
31	UNI CKO	O	SONY bus serial clock output
32	TUNER ATT	O	Tuner mute signal output
33	EE SIO	I/O	Tuner pack EEPROM serial data input/output
34	EE CKO	O	Tuner pack EEPROM serial clock output
35	RE IN0	I	Rotary encoder signal input 0
36	RE IN1	I	Rotary encoder signal input 1
37	NOSE SW	I	Front panel detection signal input
38	DOOR SW	I	Panel open detection signal input
39	HOLD	I	External bus data input (HOLD)
40	AMP DIAG	I	AMP self-diagnosis function control signal input
41	AMP STB	O	AMP standby signal output
42	(NCO)	O	Not used
43	(NCO)	O	Not used
44	WRI/WR	I	External bus data input (WRI/WR)
45	CD LIMIT	I	CD LIMIT switch detection signal input
46	CD D SW	I	CD D switch detection signal input
47	CD IN SW	I	CD IN switch detection signal input
48	4V SEL	I	4V PRE-OUT select signal input
49	MP3 SEL	I	Deck mechanism select signal input
50	DST SEL1	I	Destination select setting pin 1
51	DST SEL2	I	Destination select setting pin 2
52	CD LM LOAD	O	CD loading signal output

Pin No.	Pin Name	I/O	Pin Description
53	CD LM EJECT	O	CD eject signal output
54	CD RESET	O	CD reset signal output
55	CD AO	O	CD AO signal output
56	CD STB	O	CD strobe signal output
57	(NCO)	O	Not used
58	CD RF OK	I	CD RF OK signal input
59	CD ON	I	CD ON signal input
60	VCC2	—	Power supply pin (+5V)
61	DISP RESET	O	Display CPU reset signal output
62	VSS	—	Ground
63	TEST IN	I	Test mode signal input
64	BUS ON	O	BUS ON signal output
65	SYS RST	O	System reset signal output
66	BUS/AUX	O	BUS AUDIO/AUX-IN select signal output
67	(NCO)	O	Not used
68	ACC IN	I	ACC power supply check signal input
69	ILL IN	I	ILL check signal input
70	RC IN1	I	Rotary commander signal input
71	CDM ON	I	CD power supply ON signal input
72	CD SELF SW	I	CD SELF switch detection signal input
73	TU ATT IN	I	Tuner attenuator zero cross signal input
74	ZERO DET1	I	ZERO detection signal input 1
75	ZERO DET2	I	ZERO detection signal input 2
76	Z ATT	I	Z mute signal input
77	(NCO)	O	Not used
78	(NCO)	O	Not used
79	ROMC EN	O	Connecting to ground.
80	QUALITY	I	Tuner noise detection signal input
81	MPTH	O	Not used
82	VSM	I	S-meter signal input
83	SA IN	I	Spectrum analyzer data input
84	KEY IN1	I	Key signal input
85	KEY IN0	I	Key signal input
86	RC IN0	I	Rotary commander signal input
87	KEY ACK2	I	Rotary commander ACK signal input
88	KEY ACK0	I	Key ACK signal input
89	KEY ACK1	I	Key ACK signal input
90	DOORING	O	Sub panel LED power supply control signal output
91	RAM BU	I	RAM back-up input
92	FLD ON	O	FL driver power supply control signal output
93	FL ON	O	FL power supply control signal output
94	AVSS	—	Ground
95	DISP CE	O	Display CPU chip enable output
96	VREF	—	AD converter reference voltage (+5V)
97	AVCC	—	Power supply pin (+5V)
98	DISP SI/RX	I	Display CPU serial data input
99	DISP SO/TX	O	Display CPU serial data output
100	DISP CKO	O	Display CPU serial clock output

• IC901 M30823MH-080GP (DISPLAY CONTROL) (KEY BOARD)

Pin No.	Pin Name	I/O	Pin Description
1	SYS CE	I	Main chip enable input
2	(NCO)	O	Not used
3	FL DAT3	O	FL serial data output 3
4	(NCO)	O	Not used
5	FL CLK IN	I	FL serial clock input
6	BYTE	I	Connecting to ground.
7	CNVSS	I	Flash write-in signal input
8	PLL LPF	O	PLL low pass filter connection pin
9	PLL GND	I	Ground
10	RESET	I	CPU reset input
11	XOUT	O	Main clock signal output (8MHz)
12	VSS	—	Ground
13	XIN	I	Main clock signal input (8MHz)
14	VCC	—	Power supply pin (+5V)
15	NMI	I	Non maskable interrupt signal input
16	(NCO)	O	Not used
17	GCP IN	I	GCP pulse interrupt signal input
18, 19	(NCO)	O	Not used
20	GCP OUT	O	GCP pulse signal output
21	LAT	O	FL data LAT output
22	BK	O	FL BK signal output
23	GCP2	O	FL GCP signal output 2
24	(NCO)	O	Not used
25	GCP1	O	FL GCP signal output 1
26	(NCO)	O	Not used
27	GCP4	O	FL GCP signal output 4
28	GCP3	O	FL GCP signal output 3
29	SYS SO	O	Main bus serial data output
30	SYS SI	I	Main bus serial data input
31	SYS CLK	O	Main bus serial clock output
32	(NCO)	O	Not used
33	FL DAT1	O	FL serial data output 1
34	(NCO)	O	Not used
35	FL CLK	O	FL serial clock output
36 to 38	(NCO)	O	Not used
39	HOLD	I	External bus data input (HOLD)
40 to 43	(NCO)	O	Not used
44	WRI/WR	I	External bus data input (WRI/WR)
45 to 59	(NCO)	O	Not used
60	VCC	—	Power supply pin (+5V)
61	(NCO)	O	Not used
62	VSS	—	Ground
63 to 93	(NCO)	O	Not used
94	AVSS	—	Ground
95	(NCO)	O	Not used
96	VREF	—	Reference voltage (+5V)
97	AVCC	—	Power supply pin (+5V)
98	(NCO)	—	Not used
99	FL DAT2	O	FL serial data output 2
100	FL CLK IN	I	FL serial clock input

3-2. BLOCK DIAGRAM — CD SECTION —

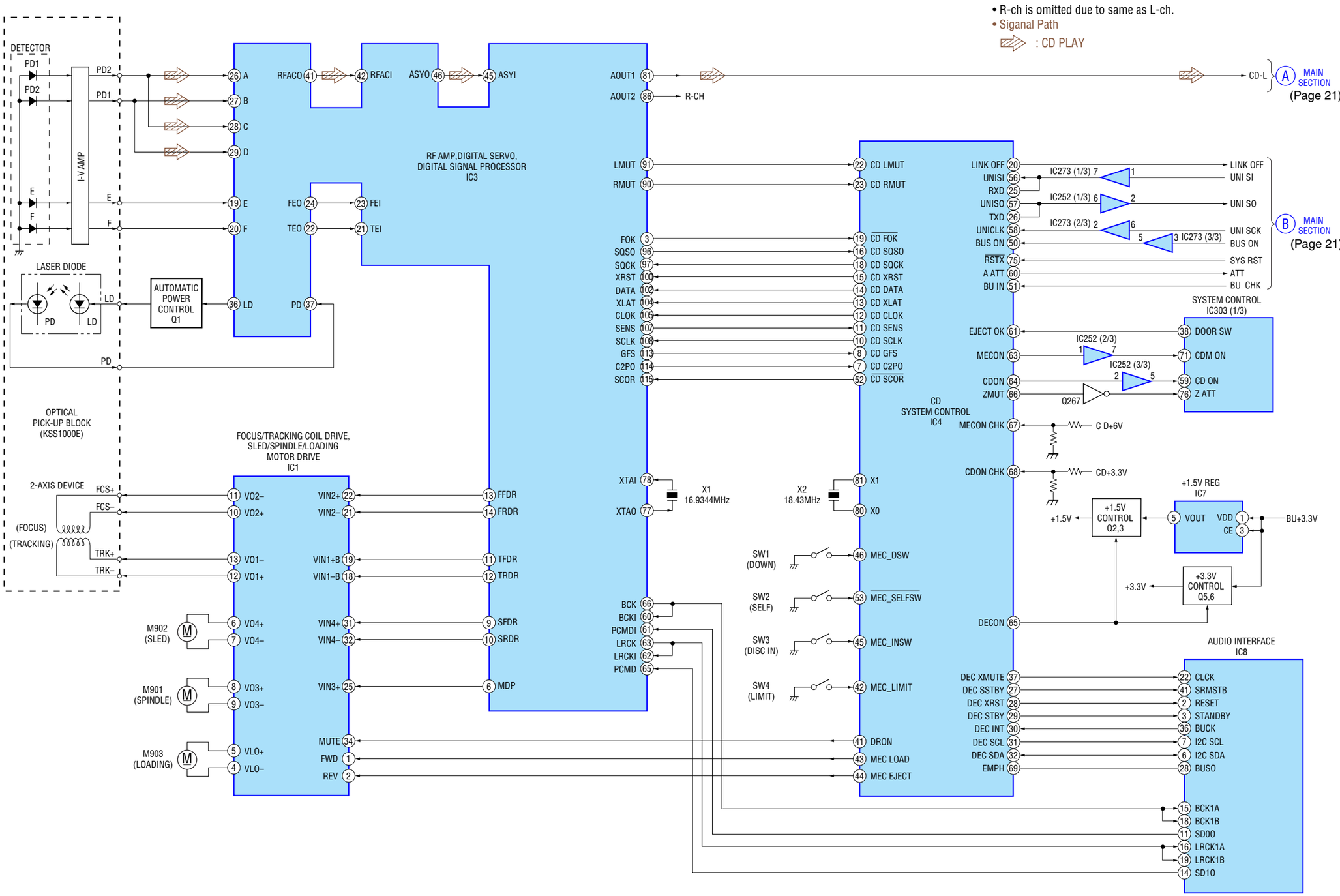

3-3. BLOCK DIAGRAM — MAIN SECTION —

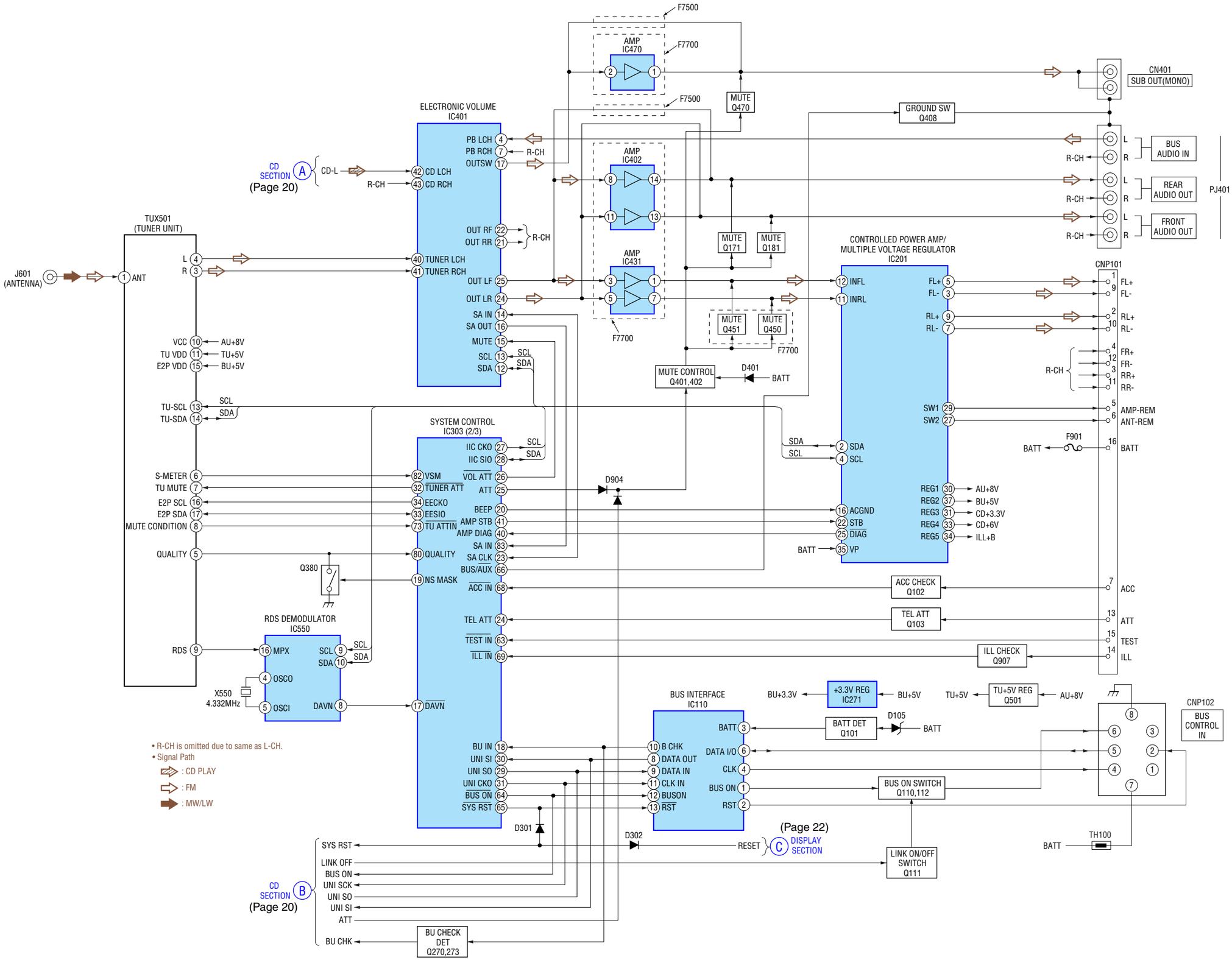

3-4. BLOCK DIAGRAM — DISPLAY SECTION —

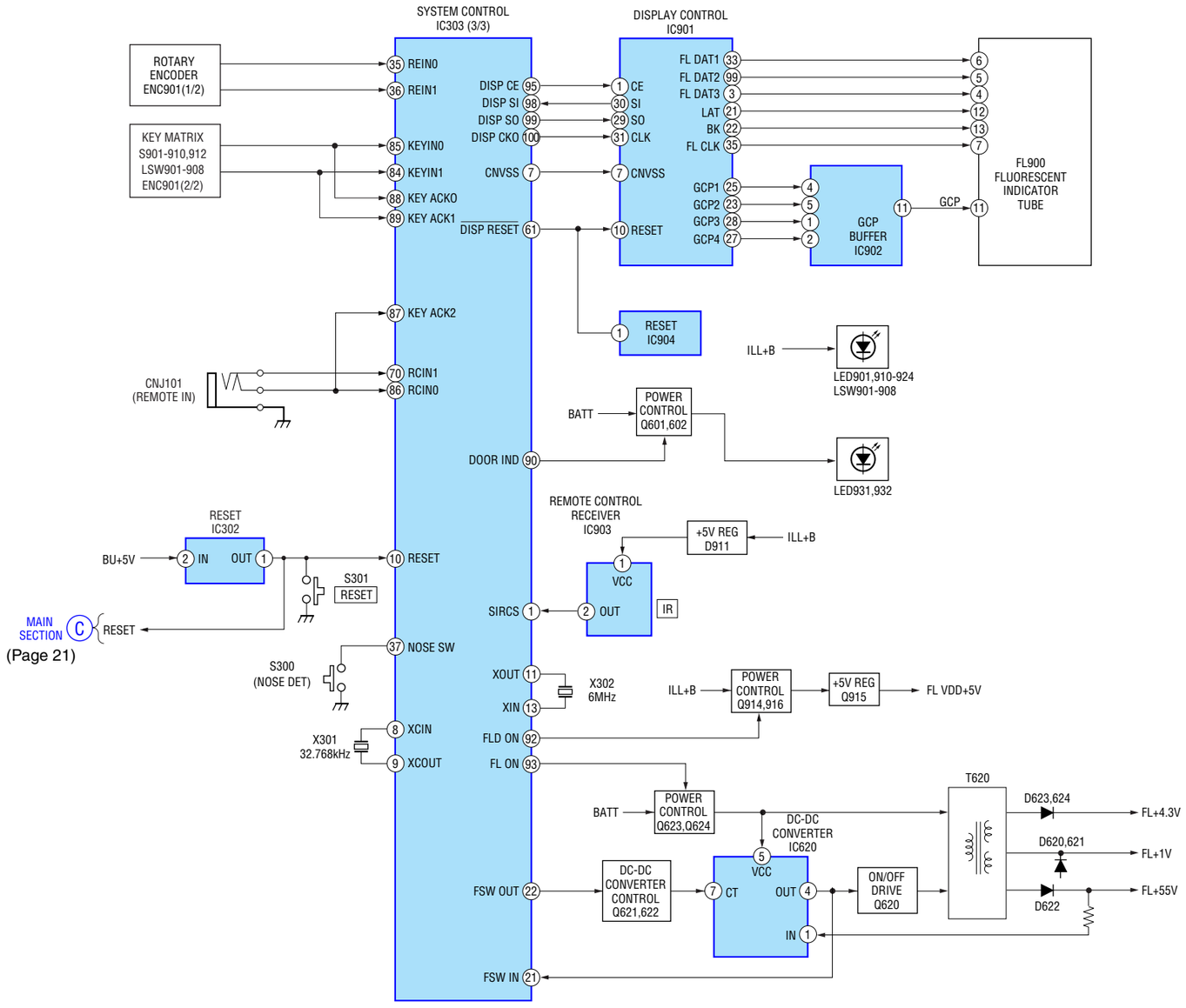

3-5. NOTE FOR PRINTED WIRING BOARDS AND SCHEMATIC DIAGRAMS

THIS NOTE IS COMMON FOR PRINTED WIRING BOARDS AND SCHEMATIC DIAGRAMS.
(In addition to this, the necessary note is printed in each block.)

For schematic diagrams.

Note:

- All capacitors are in µF unless otherwise noted. pF: µµF 50 WV or less are not indicated except for electrolytics and tantalums.
- All resistors are in Ω and 1/4 W or less unless otherwise specified.
- △ : internal component.
- ▭ : panel designation.

Note: The components identified by mark ⚠ or dotted line with mark ⚠ are critical for safety.
Replace only with part number specified.

- ▬▬ : B+ Line.
- ▬ ▬ : B– Line.
- ▭ : adjustment for repair.
- Voltages and waveforms are dc with respect to ground under no-signal (detuned) conditions.
- CD mechanism section
  no mark : CD PLAY
- Main (1/3), (2/3), (3/3) and Key sections
  no mark : FM
  ( ) : AM
  < > : CD PLAY
  * : Impossible to measure
- Voltages are taken with a VOM (Input impedance 10 MΩ). Voltage variations may be noted due to normal production tolerances.
- Waveforms are taken with a oscilloscope. Voltage variations may be noted due to normal production tolerances.
- Circled numbers refer to waveforms.
- Signal path.
  ⇨ : CD PLAY
  ⇨ : FM
  ➡ : MW/LW

For printed wiring boards.

Note:

- o——— : parts extracted from the component side.
- ——— : parts extracted from the conductor side.
- ○ : Through hole.
- ▬ : Pattern from the side which enables seeing.

(The other layers' patterns are not indicated.)

Caution:
Pattern face side: (Side B) Parts on the pattern face side seen from the pattern face are indicated.
Parts face side: (Side A) Parts on the parts face side seen from the parts face are indicated.

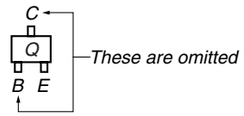

These are omitted

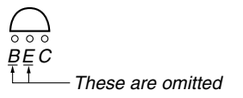

These are omitted

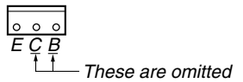

These are omitted

3-6. WAVEFORMS

— Servo Board — (MODE: CD PLAY)

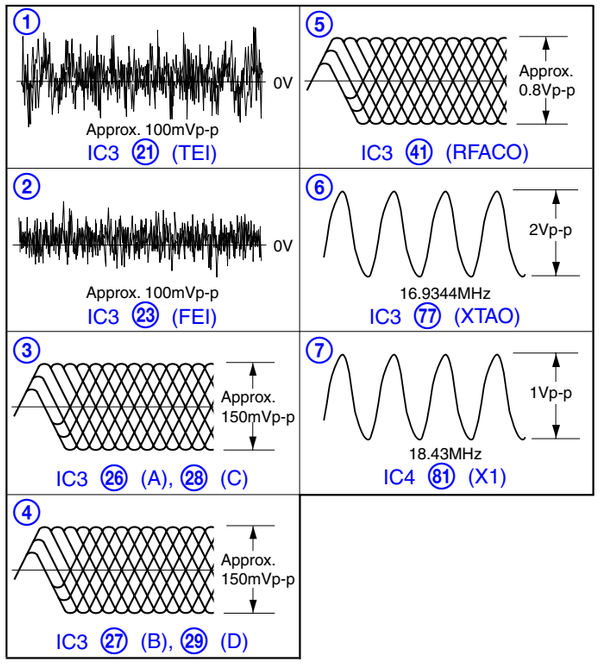

— Main Board —

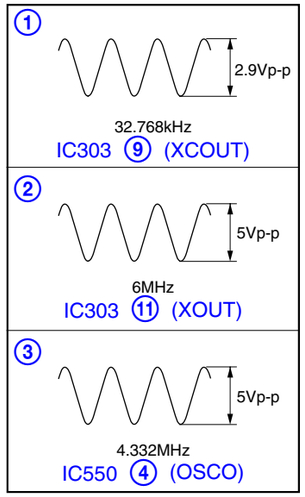

3-7. CIRCUIT BOARDS LOCATION

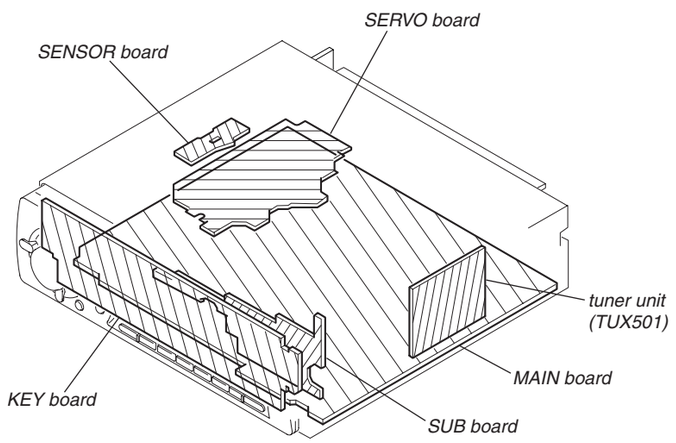

3-8. SCHEMATIC DIAGRAM — CD MECHANISM SECTION (1/2) — • Refer to page 23 for Waveforms.

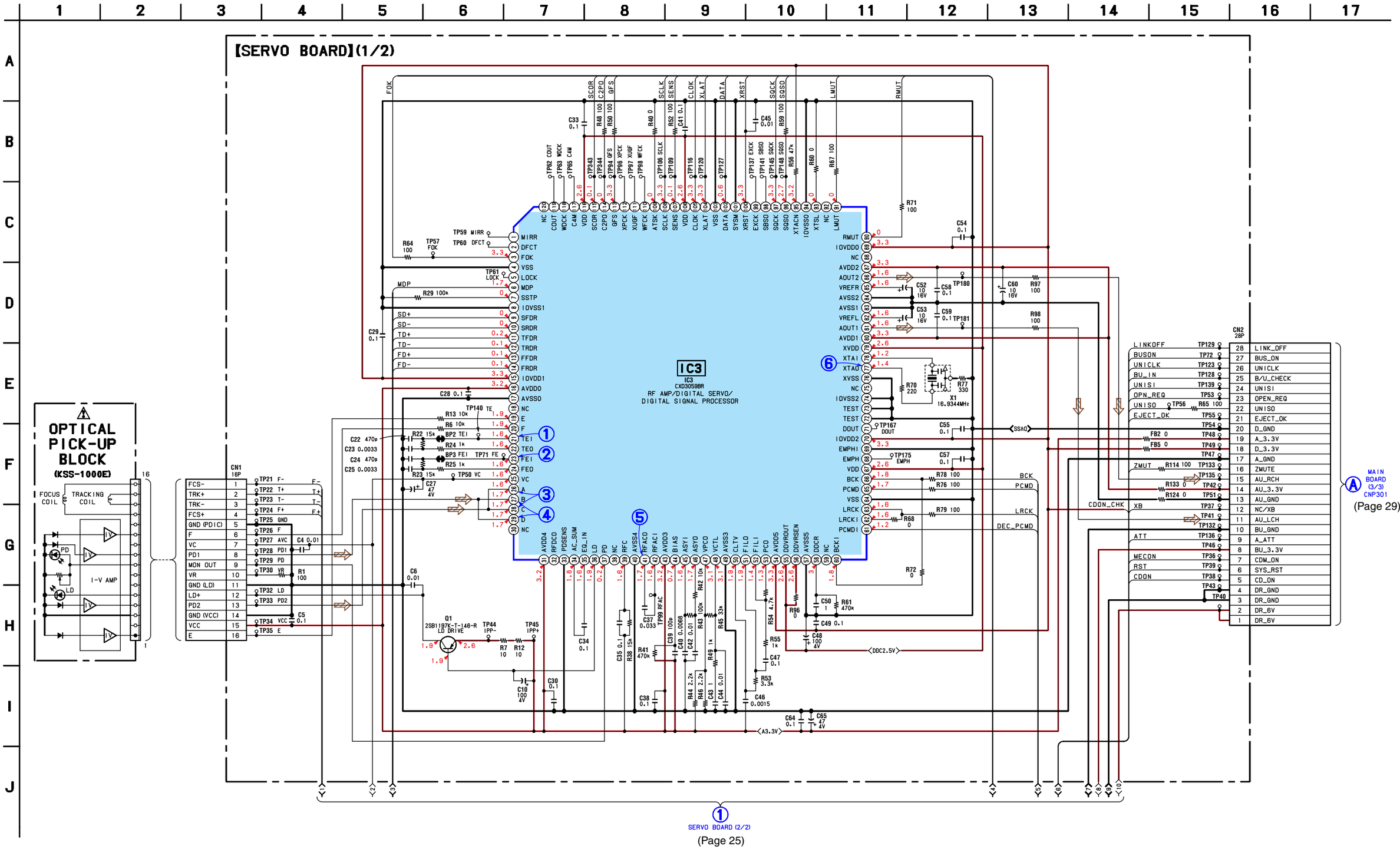

• Refer to page 23 for Waveforms.

3-9. SCHEMATIC DIAGRAM — CD MECHANISM SECTION (2/2) —

• Refer to page 36 for IC Block Diagram.

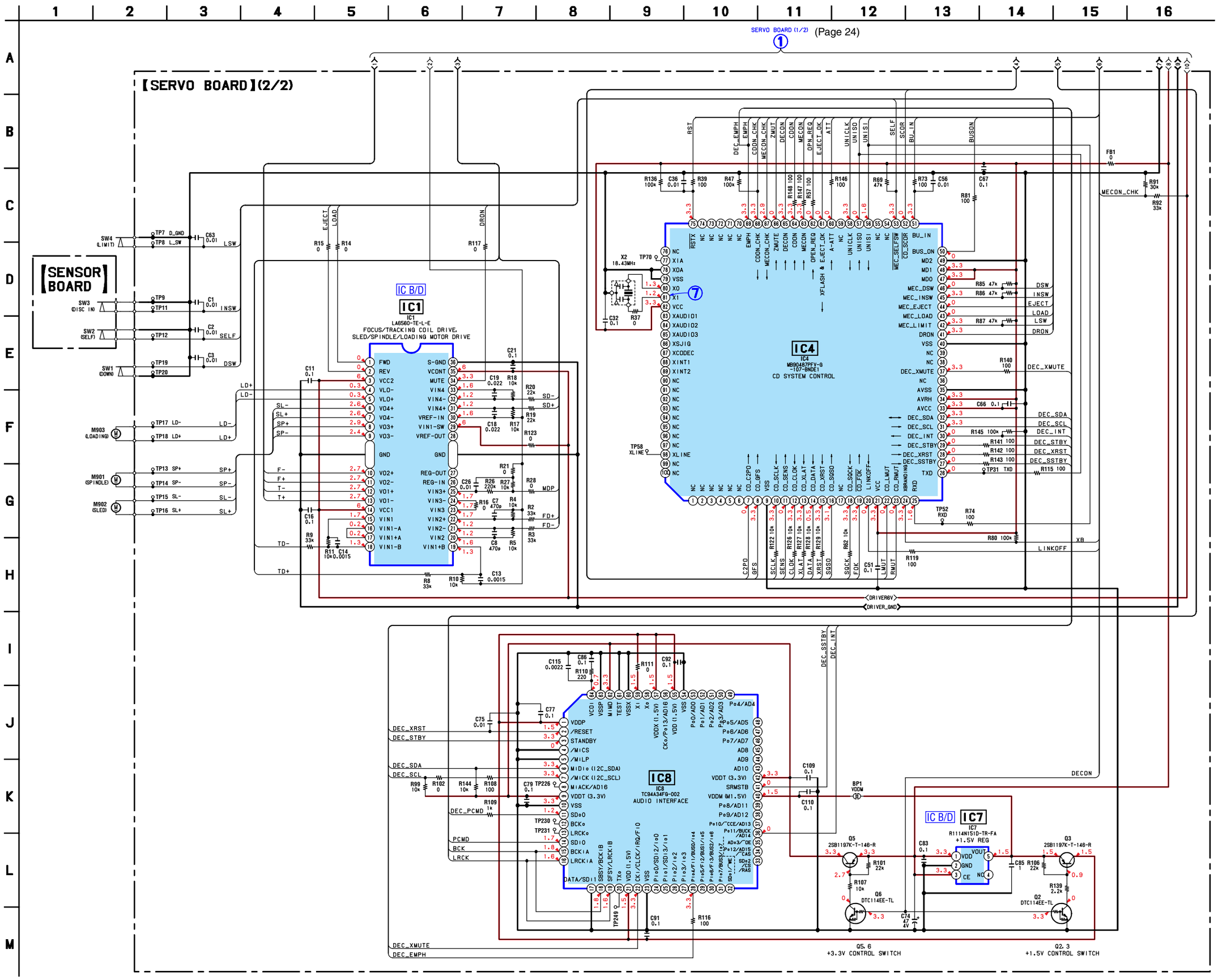

3-11. SCHEMATIC DIAGRAM — MAIN SECTION (1/3) — • Refer to page 36 for IC Block Diagram.

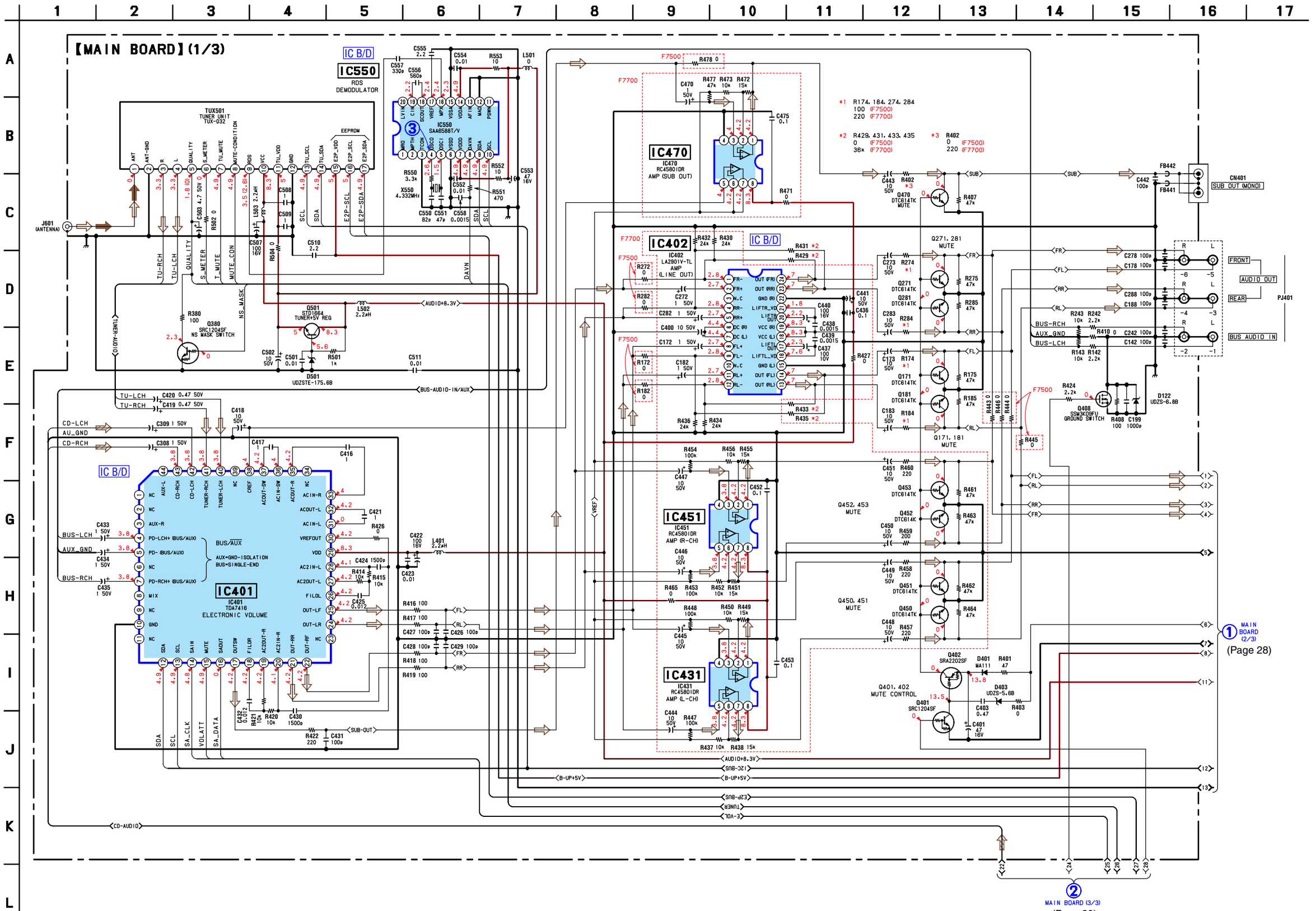

3-12. SCHEMATIC DIAGRAM — MAIN SECTION (2/3) — • Refer to page 36 for IC Block Diagram.

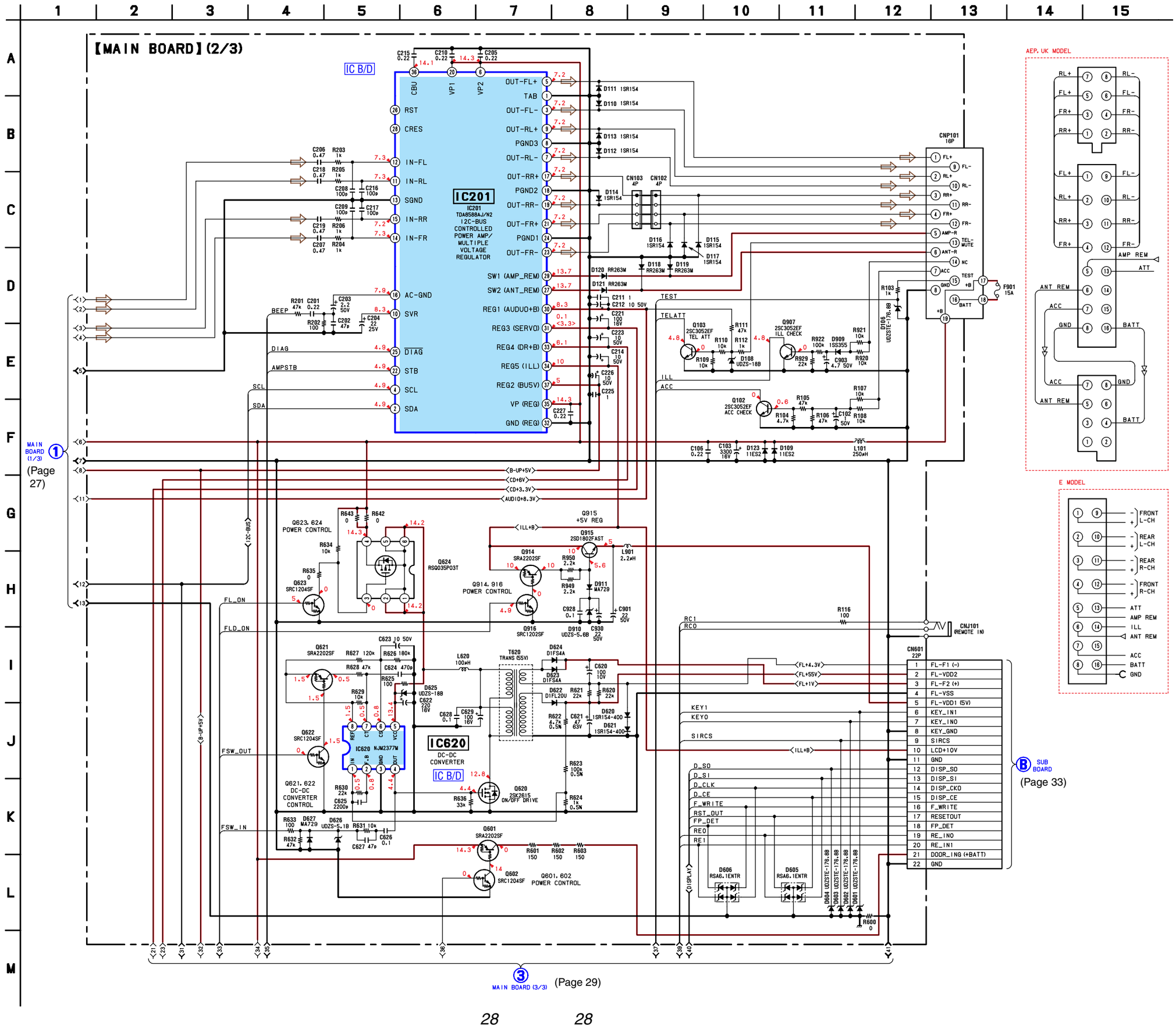

• Refer to page 23 for Waveforms.

3-13. SCHEMATIC DIAGRAM — MAIN SECTION (3/3) — • Refer to page 37 for IC Block Diagram.

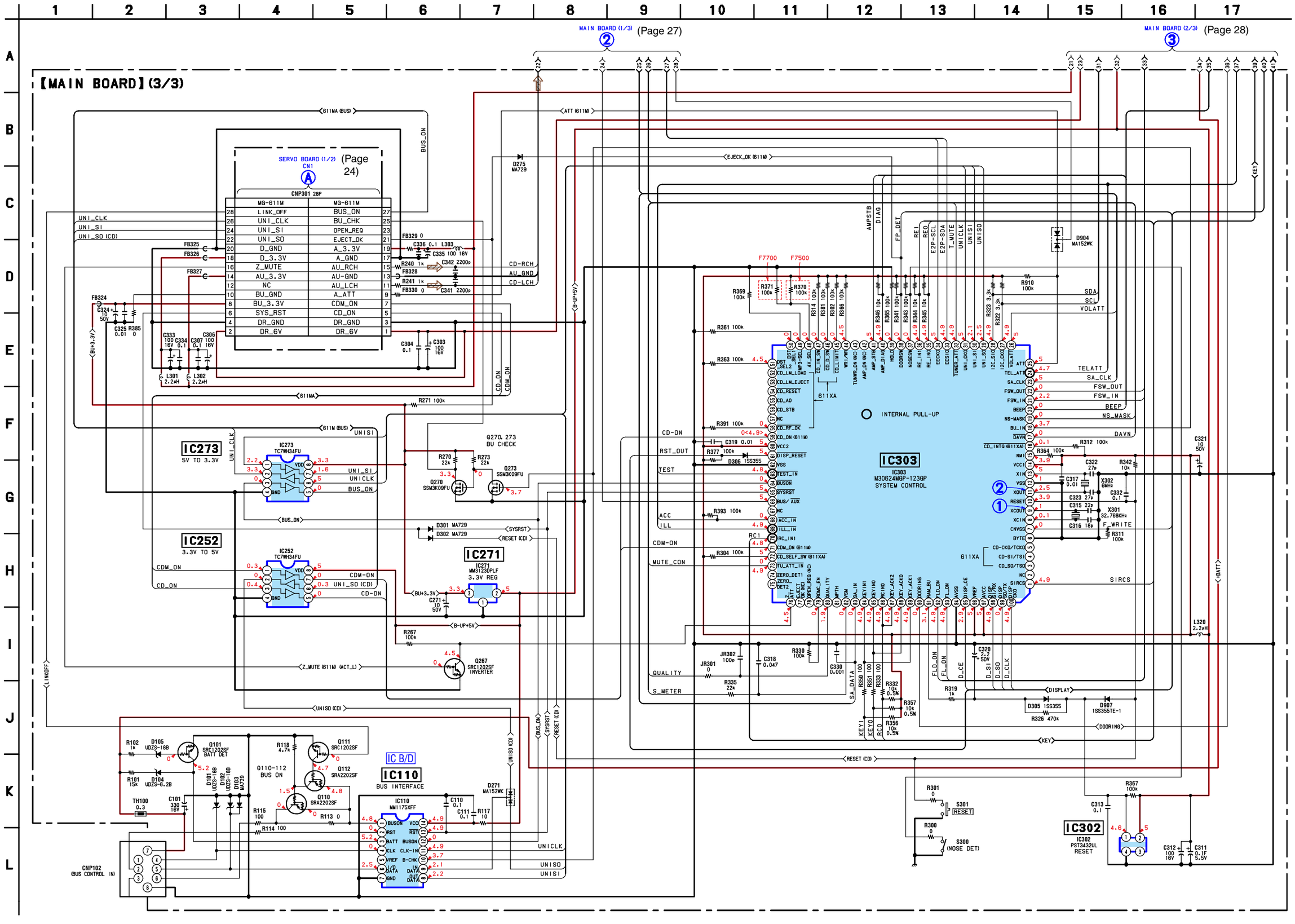

3-16. SCHEMATIC DIAGRAM — SUB SECTION —

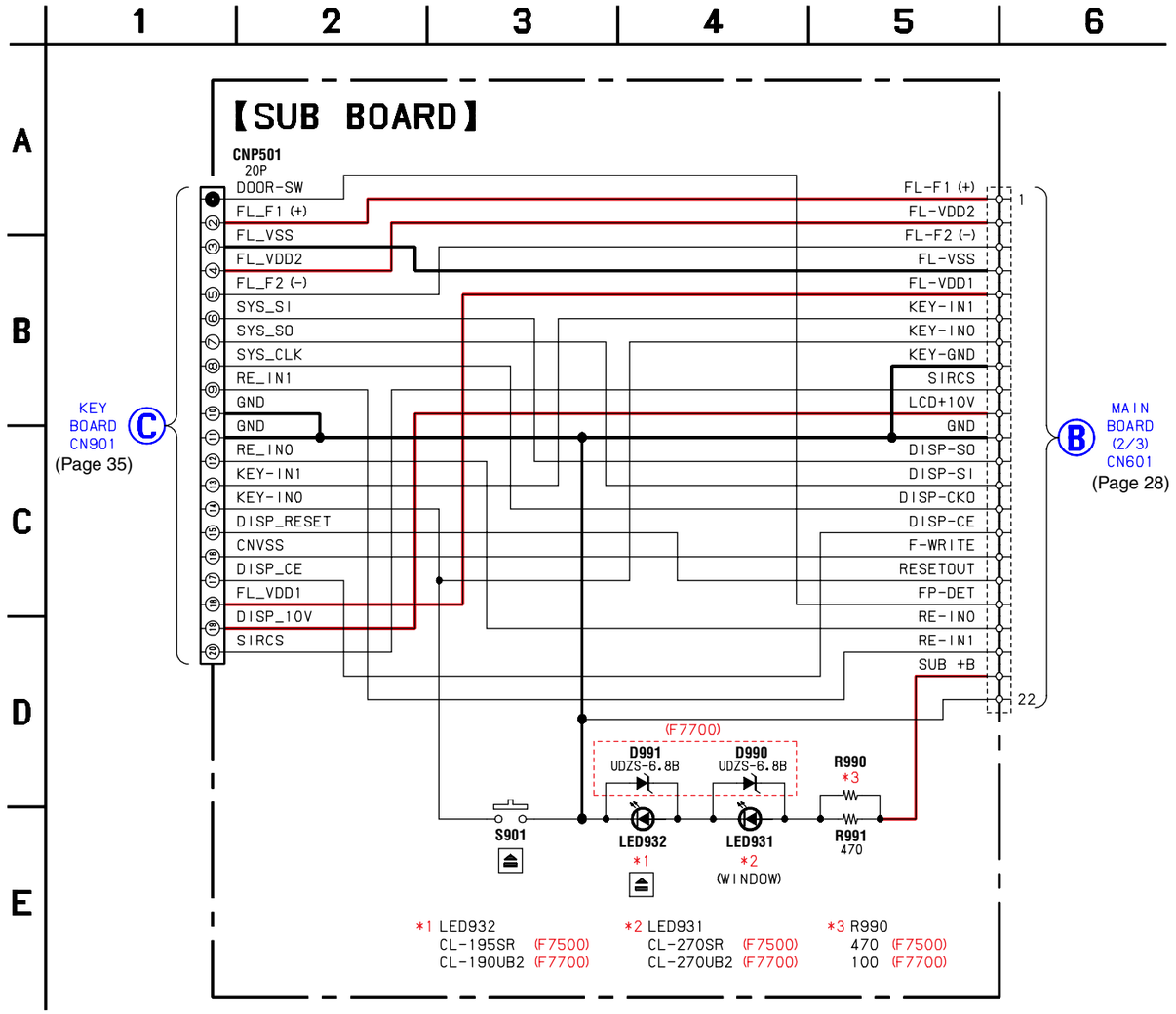

3-18. SCHEMATIC DIAGRAM — KEY SECTION —

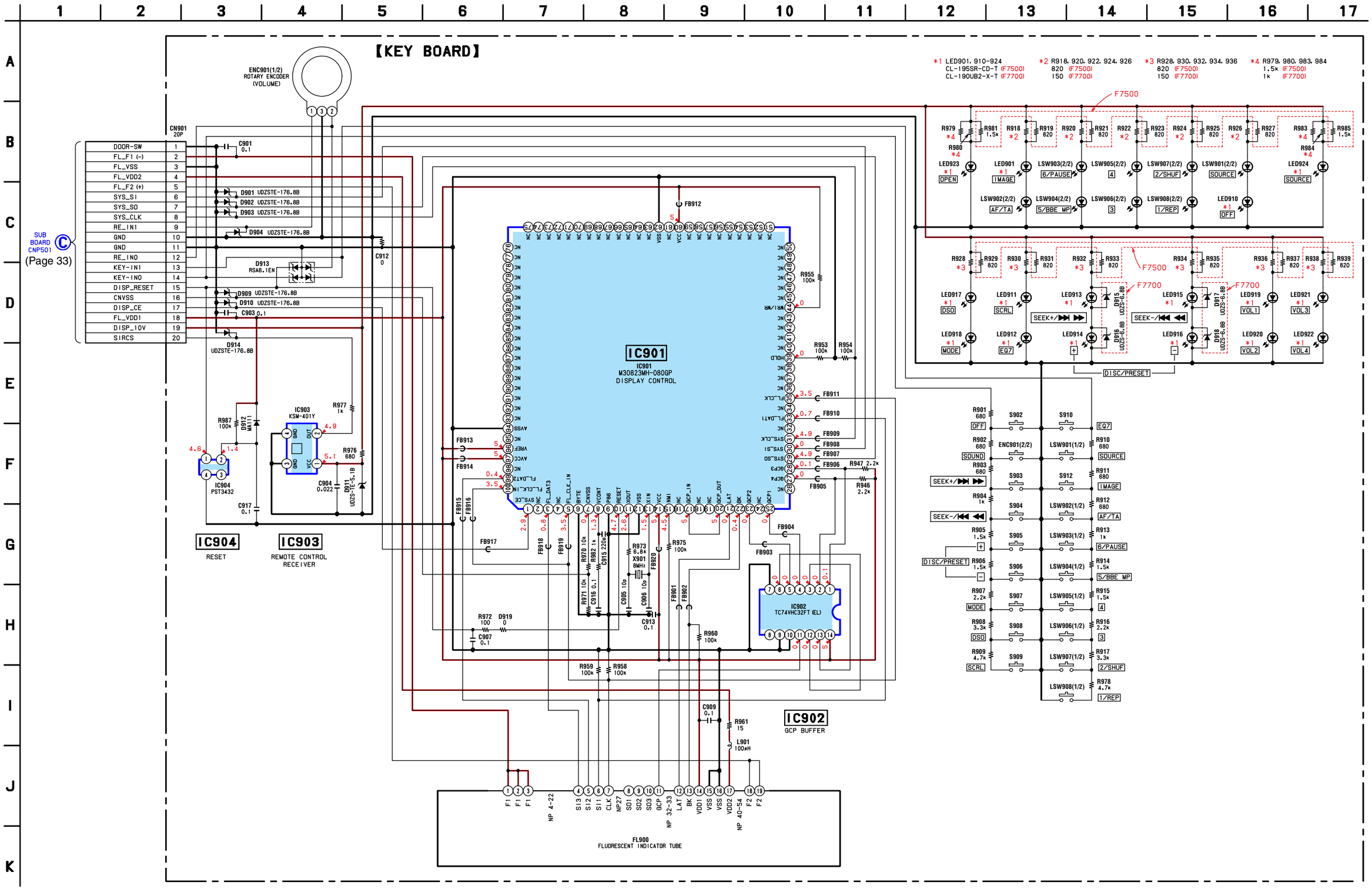

3-19. IC BLOCK DIAGRAMS

IC1 LA6560-TE-L-E (SERVO Board (2/2))

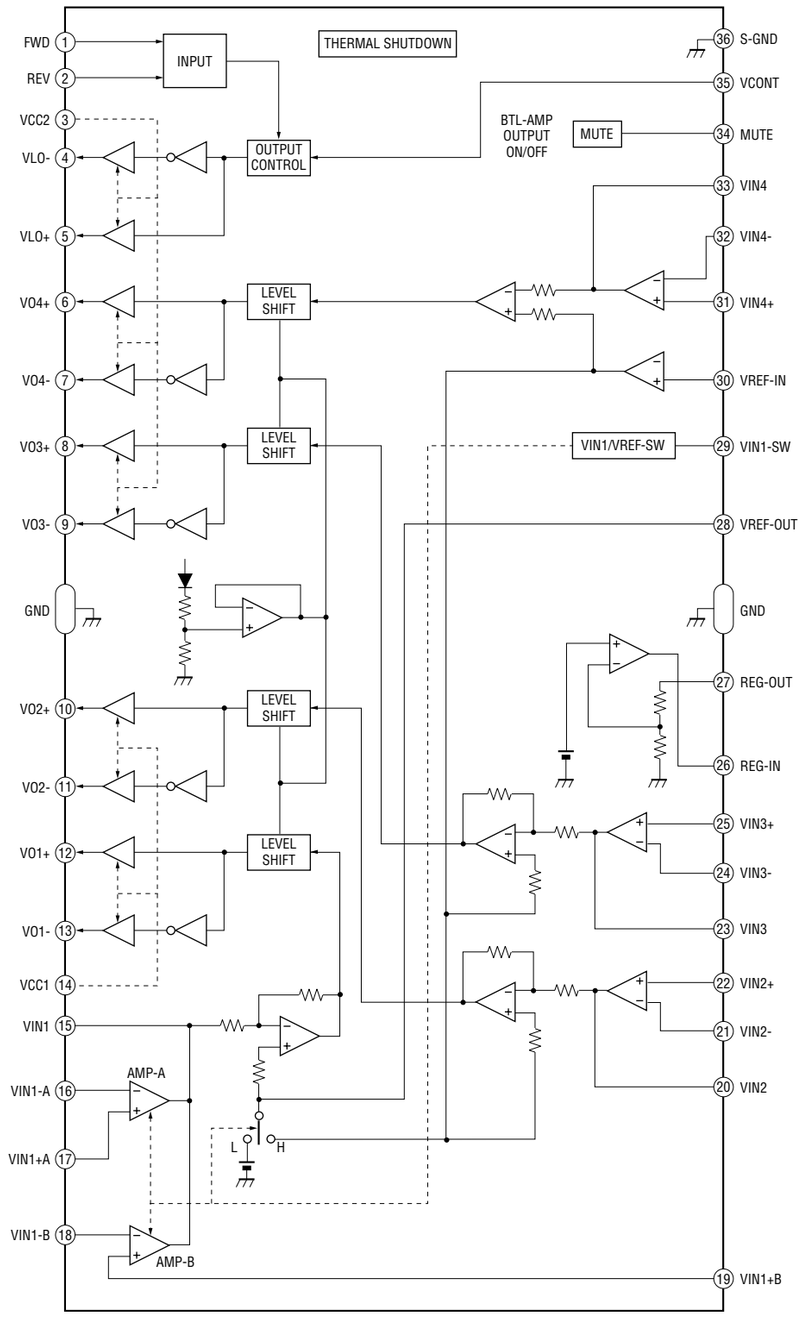

IC7 R1114N151D-TR-FA (SERVO Board (2/2))

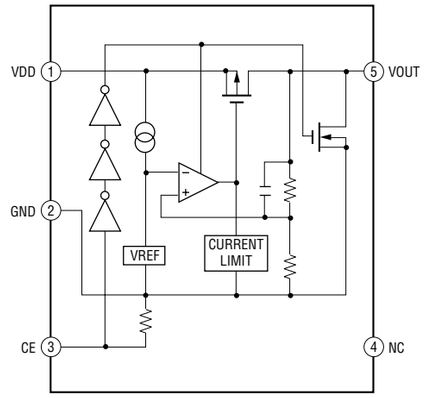

IC402 LA2901V-TL (MAIN Board (1/3))

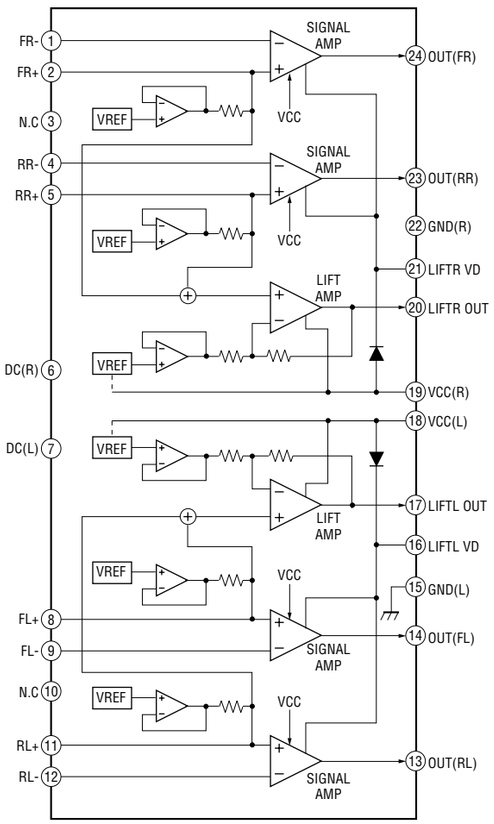

IC401 TDA7416 (MAIN Board (1/3))

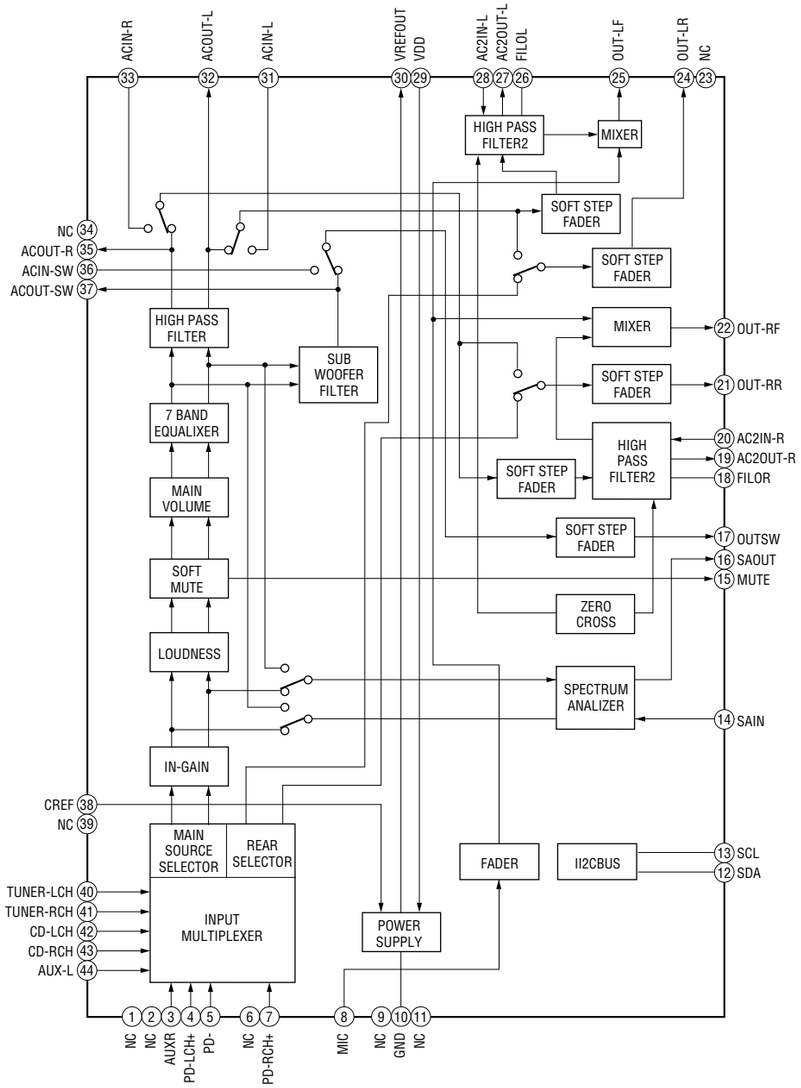

IC620 NJM2377M(TE2) (MAIN Board (2/3))

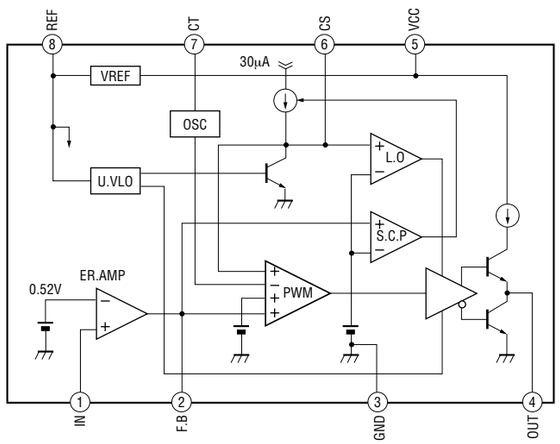

IC201 TDA8588AJ/N2 (MAIN Board (2/3))

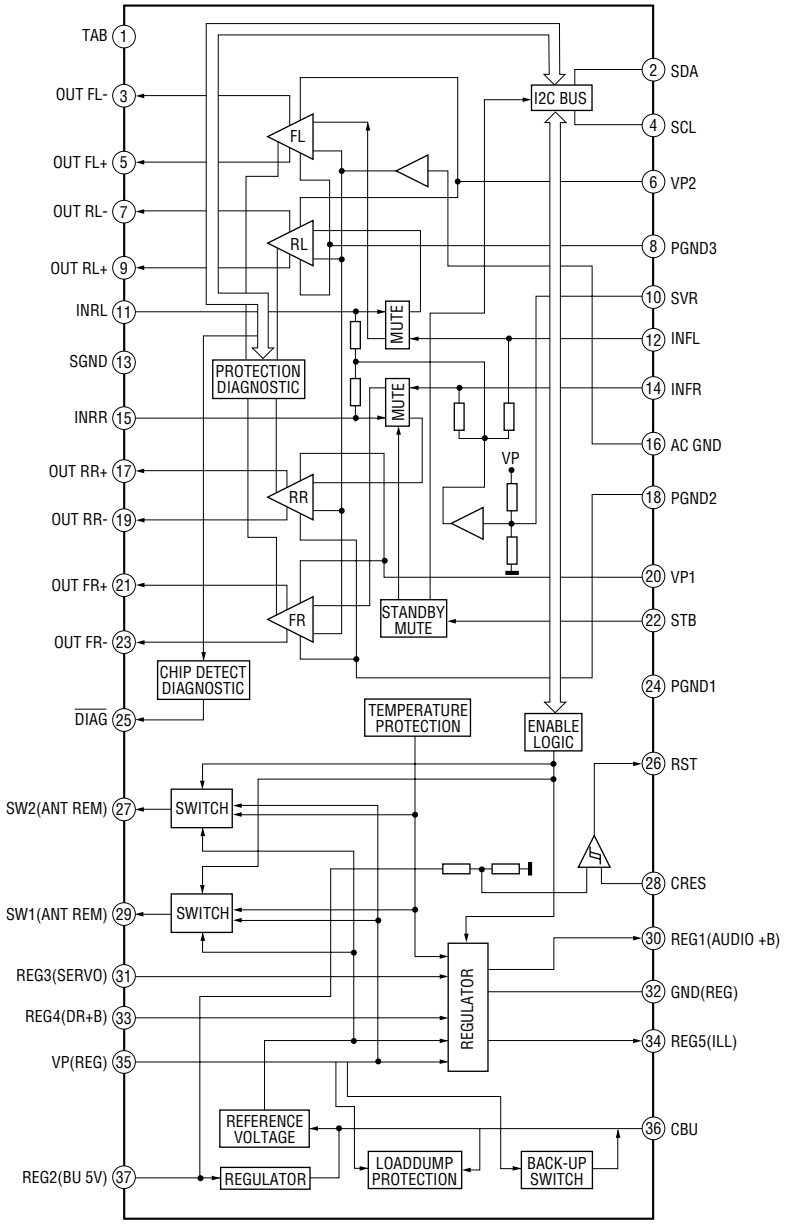

IC550 SAA6588T/V (MAIN Board (1/3))

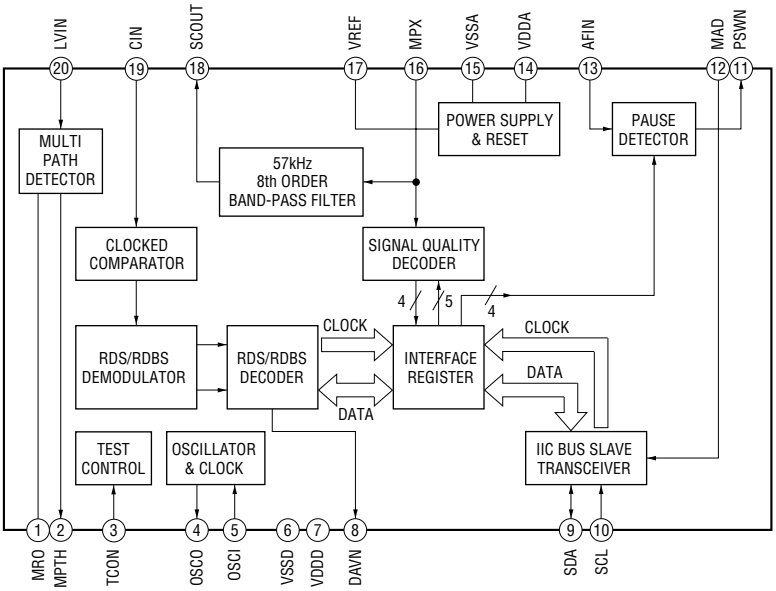

IC110 MM1175XFF (MAIN Board (3/3))

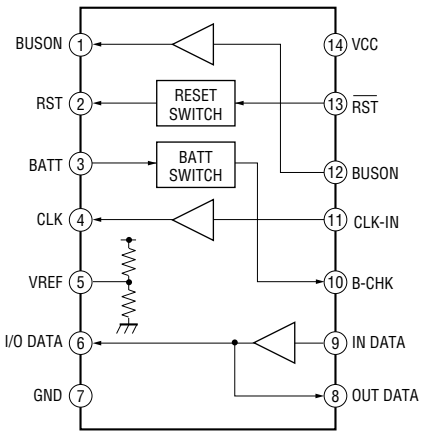

SECTION 4
EXPLODED VIEWS

NOTE:
- The mechanical parts with no reference number in the exploded views are not supplied.
- Items marked "*" are not stocked since they are seldom required for routine service. Some delay should be anticipated when ordering these items.
- -XX and -X mean standardized parts, so they may have some difference from the original one.
- Color Indication of Appearance Parts
  Example :
  KNOB, BALANCE (WHITE) ... (RED)
  ↑ Parts Color ↑ Cabinet's Color
- Accessories are given in the last of this parts list.

The components identified by mark ⚠ or dotted line with mark ⚠ are critical for safety.
Replace only with part number specified.

4-1. MAIN SECTION

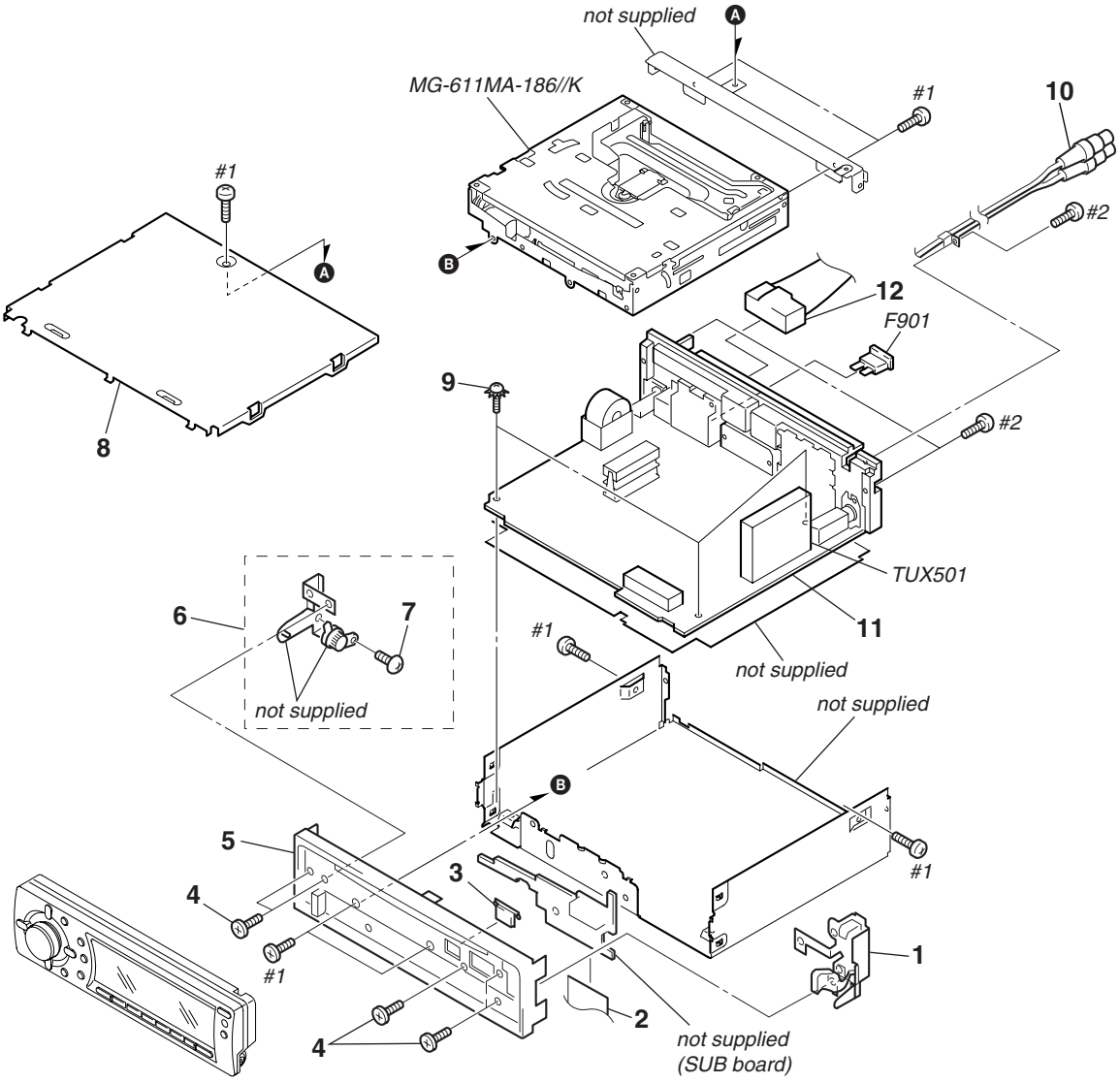

Ref. No.	Part No.	Description	Remark
1	X-3384-273-1	LOCK ASSY	
2	1-828-511-11	CABLE, FLAT (FFC) 22P	
3	3-246-030-01	BUTTON (EJECT)	
4	3-261-903-01	SCREW (+BTT 2X5)	
5	X-3384-490-1	PANEL ASSY (CD), SUB	
6	X-3384-271-1	GEAR ASSY	
7	3-713-786-51	SCREW +P 2X3	
* 8	3-246-006-31	COVER	
9	3-376-464-11	SCREW (+PTT 2.6X6), GROUND POINT	
10	1-790-375-12	CORD (WITH CONNECTOR) (SUB OUT (MONO))	
11	A-3283-454-A	MAIN BOARD, COMPLETE (F7500)	
11	A-3283-460-A	MAIN BOARD, COMPLETE (F7700)	
12	1-776-527-71	CORD (WITH CONNECTOR) (ISO) (POWER)	(AEP,UK)
12	1-776-207-72	CORD (WITH CONNECTOR) (E)	
F901	1-532-877-11	FUSE (BLADE TYPE) (AUTO FUSE) 10A	
TUX501	A-3220-961-A	TUNER UNIT (TUX-032//Q3)	
#1	7-685-792-09	SCREW +PTT 2.6X6 (S)	
#2	7-685-793-09	SCREW +PTT 2.6X8 (S)	

4-2. FRONT PANEL SECTION

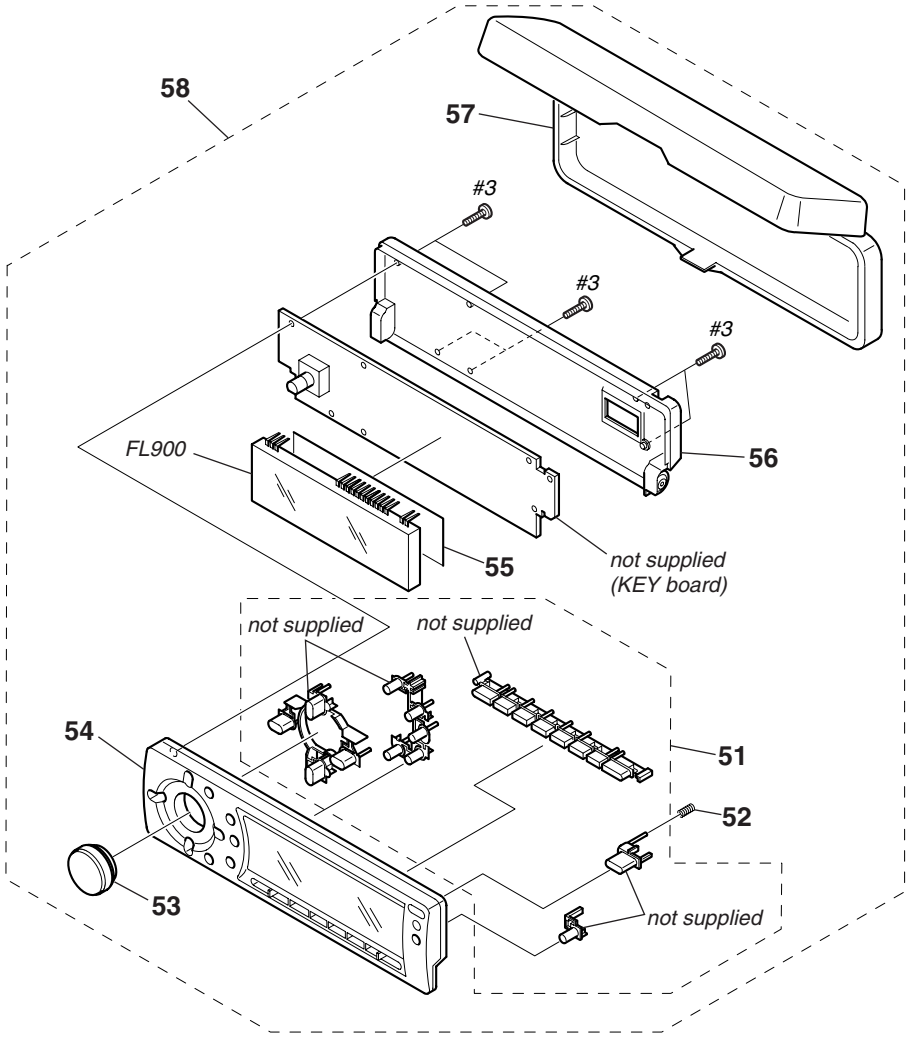

Ref. No.	Part No.	Description	Remark
51	X-3384-508-1	BUTTON KIT ASSY (S)	
52	3-265-937-01	SPRING (OPEN)	
53	X-3384-635-1	KNOB ASSY (S)	
54	X-3385-024-1	PANEL ASSY (S), FRONT (E)	
54	X-3385-025-1	PANEL ASSY (S), FRONT (F7500)	
54	X-3385-026-1	PANEL ASSY (S), FRONT (F7700:AEP,UK)	
55	3-260-341-01	SHEET (FL)	
56	X-3384-495-1	PANEL ASSY, FRONT BACK	

Ref. No.	Part No.	Description	Remark
57	X-3378-390-3	CASE ASSY (for FRONT PANEL)	
58	A-3372-637-A	COMPLETE ASSY, FRONT PANEL (F7500)	
58	A-3372-685-A	COMPLETE ASSY, FRONT PANEL (E)	
58	A-3372-688-A	COMPLETE ASSY, FRONT PANEL	(F7700:AEP,UK)
FL900	1-518-953-11	INDICATOR TUBE, FLUORESCENT	
#3	7-685-105-19	SCREW +P 2X8 TYPE2 NON-SLIT	

4-3. CD MECHANISM SECTION (1)
(MG-611MA-186//K)

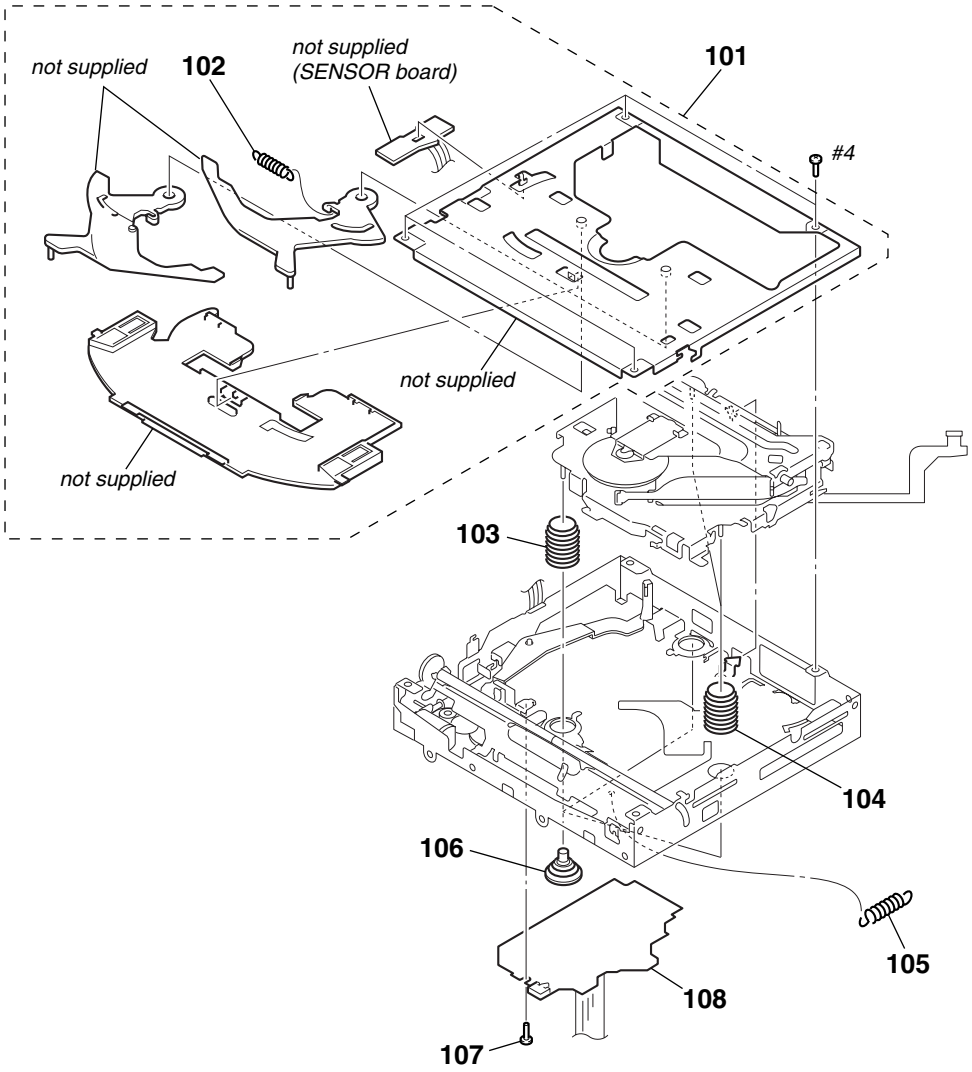

Ref. No.	Part No.	Description	Remark
101	A-3372-455-A	CHASSIS (T) SUB ASSY	
102	3-253-729-01	SPRING (LTR), TENSION COIL	
103	3-253-746-13	SPRING (DAMPER), COMPRESSION	
104	3-253-746-03	SPRING (DAMPER), COMPRESSION	
105	3-253-695-01	SPRING (KF), TENSION COIL	
106	3-253-748-01	DAMPER (S)	
107	3-352-758-31	SCREW (M1.7), TOOTHED LOCK	
108	A-3283-359-A	SERVO BOARD, COMPLETE	
#4	7-627-552-87	SCREW, PRECISION +P 1.7X2.2	

4-4. CD MECHANISM SECTION (2)
(MG-611MA-186//K)

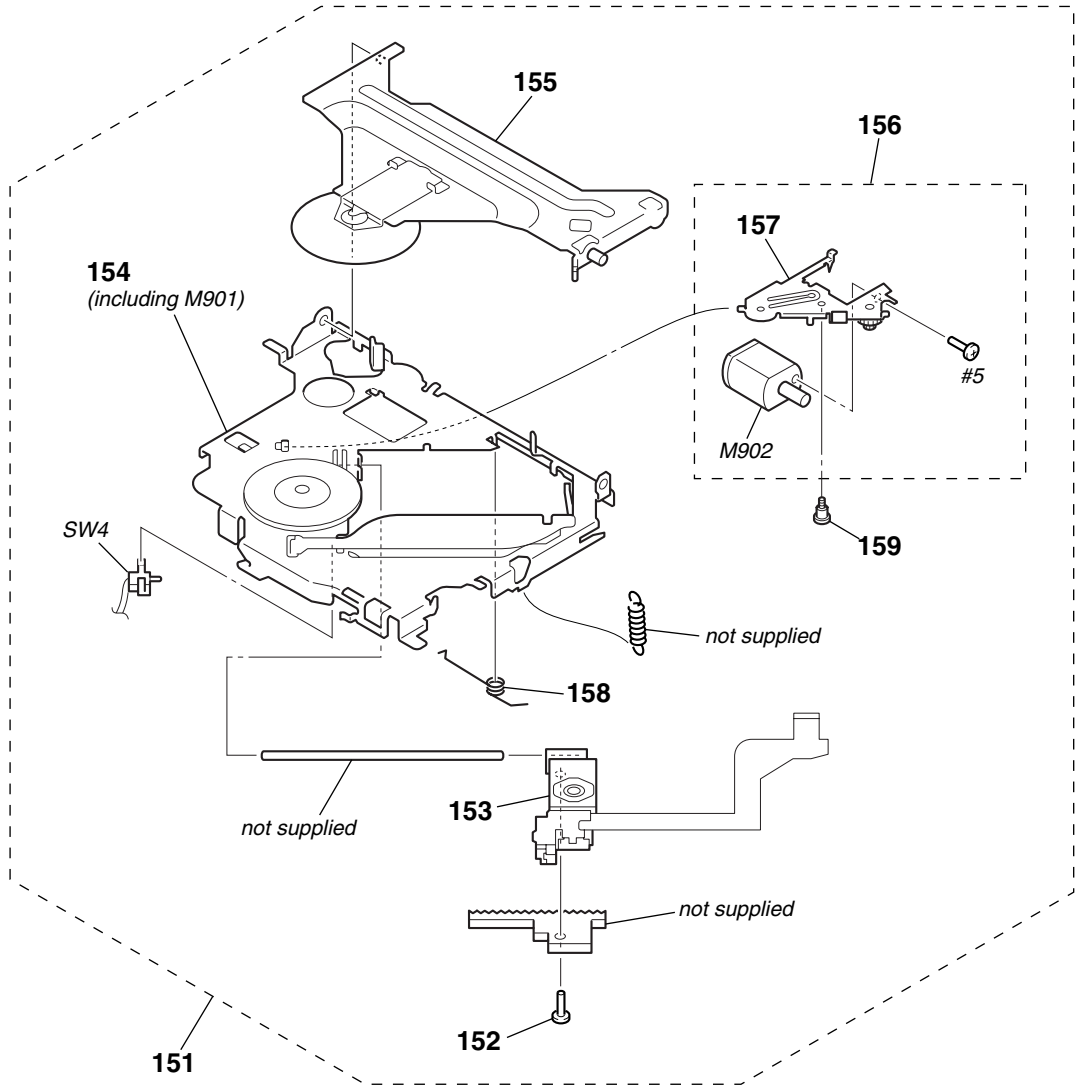

The components identified by mark ⚠ or dotted line with mark. ⚠ are critical for safety.
Replace only with part number specified.

Ref. No.	Part No.	Description	Remark
151	A-3337-637-A	CHASSIS (OP) COMPLETE ASSY	
152	3-316-938-91	SCREW (B1.4X5), TAPPING	
⚠153	8-820-207-02	OPTICAL PICK-UP (KSS1000E/K1RP)	
154	A-3337-640-A	CHASSIS (OP) SUB ASSY (including M901)	
155	A-3337-641-A	ARM SUB ASSY, CHUCKING	
156	A-3337-639-A	LEVER (SL) SUB ASSY	

Ref. No.	Part No.	Description	Remark
157	X-3383-454-3	LEVER (SL) ASSY	
158	3-261-959-02	SPRING (SL), TORSION	
159	3-264-165-02	SCREW	
M902	A-3337-638-A	MOTOR ASSY, SL (SLED)	
SW4	1-571-099-11	SWITCH (1 KEY) (LIMIT)	
#5	7-627-850-77	SCREW, PRECISION +P 1.4X1.8	

4-5. CD MECHANISM SECTION (3)
(MG-611MA-186//K)

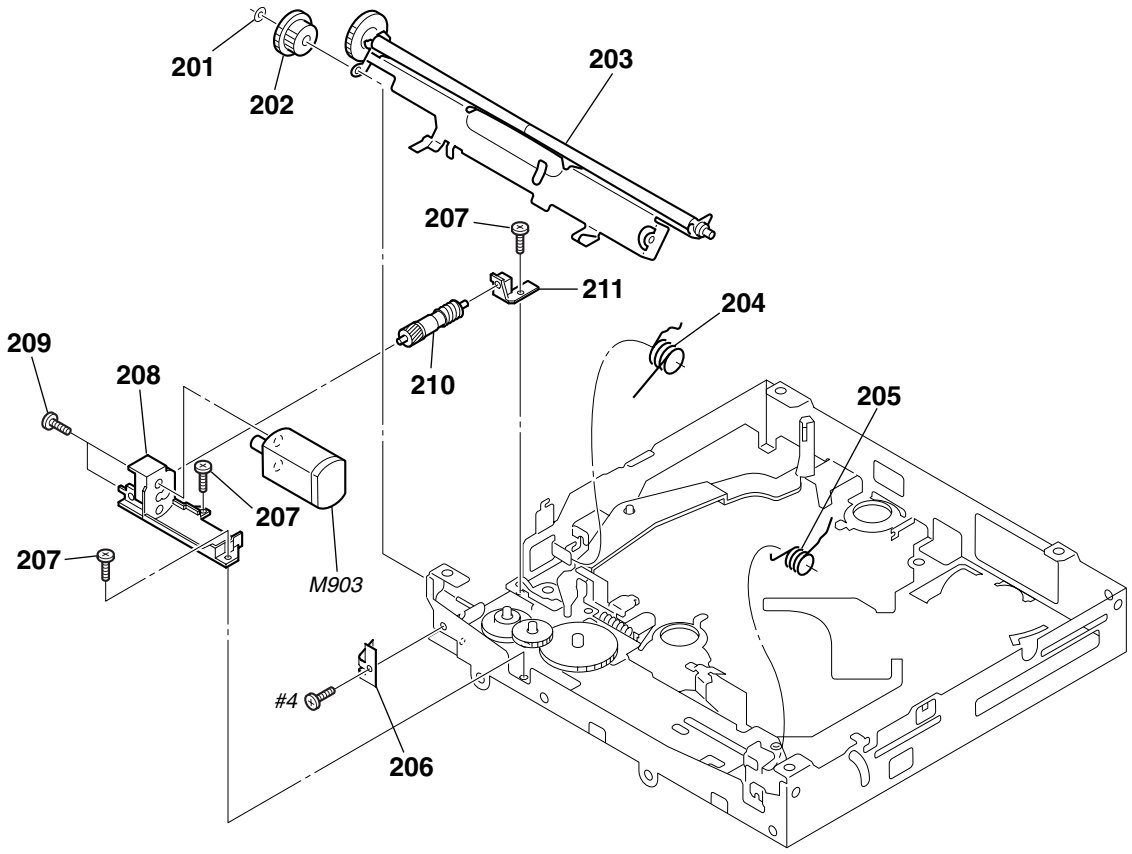

Ref. No.	Part No.	Description	Remark
201	3-262-755-01	WASHER (1.1-2.5)	
202	3-259-024-01	WHEEL (RA), WORM	
203	A-3337-633-A	ARM ASSY, ROLLER	
204	3-259-455-02	SPRING (RAL)	
205	3-253-713-01	SPRING (RAR)	
206	3-259-469-01	SPRING (LE), LEAF	
207	2-134-636-31	SCREW (M1.7X2.5)	
208	3-259-467-01	BRACKET (LEM)	
209	3-345-648-91	SCREW (M1.4), TOOTHED LOCK	
210	A-3372-456-A	WORM (LEB) ASSY	
211	3-259-468-01	BEARING (LEB)	
M903	A-3372-454-A	MOTOR ASSY, LE (LOADING)	
#4	7-627-552-87	SCREW, PRECISION +P 1.7X2.2	

4-6. CD MECHANISM SECTION (4)
(MG-611MA-186//K)

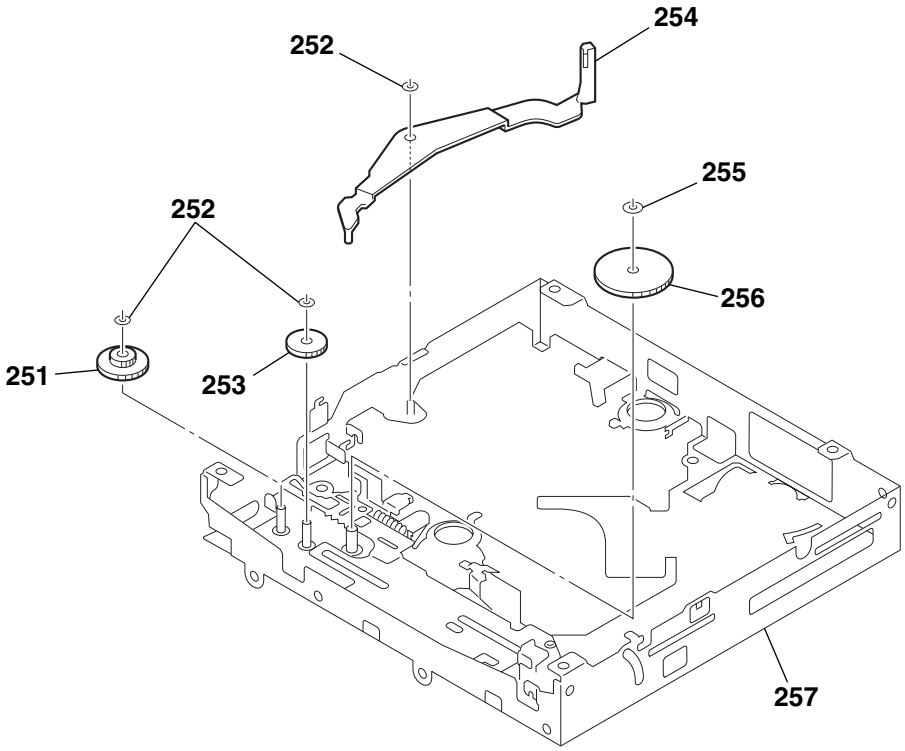

Ref. No.	Part No.	Description	Remark
251	3-259-429-01	WHEEL (LE), WORM	
252	3-344-223-01	WASHER	
253	3-259-470-01	GEAR (LE1)	
254	3-253-755-02	LEVER (D)	
255	3-899-829-01	WASHER (SLIT)	
256	3-259-032-01	GEAR (LE2)	
257	A-3372-453-A	CHASSIS (M) BLOCK ASSY	

KEY

SECTION 5
ELECTRICAL PARTS LIST

NOTE:
- Due to standardization, replacements in the parts list may be different from the parts specified in the diagrams or the components used on the set.
- -XX and -X mean standardized parts, so they may have some difference from the original one.
- RESISTORS
  All resistors are in ohms.
  METAL:Metal-film resistor.
  METAL OXIDE: Metal oxide-film resistor.
  F:nonflammable
- Items marked "*" are not stocked since they are seldom required for routine service. Some delay should be anticipated when ordering these items.
- SEMICONDUCTORS
  In each case, u : µ, for example:
  uA.. : µA.. uPA.. : µPA..
  uPB.. : µPB.. uPC.. : µPC.. uPD.. : µPD..
- CAPACITORS
  uF : µF
- COILS
  uH : µH

The components identified by mark ⚠ or dotted line with mark. ⚠ are critical for safety.
Replace only with part number specified.

When indicating parts by reference number, please include the board.

Ref. No.	Part No.	Description			Remark
		KEY BOARD			
		**********			
	3-260-341-01	SHEET (FL)			
		< CAPACITOR >			
C901	1-107-826-11	CERAMIC CHIP	0.1uF	10%	16V
C903	1-107-826-11	CERAMIC CHIP	0.1uF	10%	16V
C904	1-164-227-11	CERAMIC CHIP	0.022uF	10%	25V
C905	1-162-915-11	CERAMIC CHIP	10PF	0.5PF	50V
C906	1-162-915-11	CERAMIC CHIP	10PF	0.5PF	50V
C907	1-107-826-11	CERAMIC CHIP	0.1uF	10%	16V
C909	1-107-826-11	CERAMIC CHIP	0.1uF	10%	16V
C912	1-216-864-11	SHORT CHIP	0		
C913	1-107-826-11	CERAMIC CHIP	0.1uF	10%	16V
C915	1-164-230-11	CERAMIC CHIP	220PF	5%	50V
C916	1-107-826-11	CERAMIC CHIP	0.1uF	10%	16V
C917	1-107-826-11	CERAMIC CHIP	0.1uF	10%	16V
		< CONNECTOR >			
CN901	1-818-141-11	PLUG, CONNECTOR 20P			
		< DIODE >			
D901	8-719-978-33	DIODE DTZ-TT11-6.8B			
D902	8-719-978-33	DIODE DTZ-TT11-6.8B			
D903	8-719-978-33	DIODE DTZ-TT11-6.8B			
D904	8-719-978-33	DIODE DTZ-TT11-6.8B			
D909	8-719-978-33	DIODE DTZ-TT11-6.8B			
D910	8-719-978-33	DIODE DTZ-TT11-6.8B			
D911	8-719-069-54	DIODE UDZS-TE17-5.1B			
D912	8-719-404-50	DIODE MA111-TX			
D913	6-500-886-01	DIODE RSA6.1ENTR			
D914	8-719-978-33	DIODE DTZ-TT11-6.8B			
D915	8-719-978-33	DIODE DTZ-TT11-6.8B (F7700)			
D916	8-719-978-33	DIODE DTZ-TT11-6.8B (F7700)			
D917	8-719-978-33	DIODE DTZ-TT11-6.8B (F7700)			
D918	8-719-978-33	DIODE DTZ-TT11-6.8B (F7700)			
D919	1-216-864-11	SHORT CHIP	0		
		< ROTARY ENCODER >			
ENC901	1-478-474-11	ENCODER, ROTARY (SOUND,VOLUME)			
		< FERRITE BEAD >			
FB901	1-414-760-21	INDUCTOR, FERRITE BEAD			
FB902	1-414-760-21	INDUCTOR, FERRITE BEAD			
FB903	1-414-760-21	INDUCTOR, FERRITE BEAD			
FB904	1-414-760-21	INDUCTOR, FERRITE BEAD			
FB905	1-414-760-21	INDUCTOR, FERRITE BEAD			
FB906	1-414-760-21	INDUCTOR, FERRITE BEAD			
FB907	1-414-760-21	INDUCTOR, FERRITE BEAD			
FB908	1-414-760-21	INDUCTOR, FERRITE BEAD			
FB909	1-414-760-21	INDUCTOR, FERRITE BEAD			
FB910	1-414-760-21	INDUCTOR, FERRITE BEAD			
FB911	1-414-760-21	INDUCTOR, FERRITE BEAD			
FB912	1-414-760-21	INDUCTOR, FERRITE BEAD			
FB913	1-414-760-21	INDUCTOR, FERRITE BEAD			
FB914	1-414-760-21	INDUCTOR, FERRITE BEAD			
FB915	1-414-760-21	INDUCTOR, FERRITE BEAD			
FB916	1-414-760-21	INDUCTOR, FERRITE BEAD			
FB917	1-414-760-21	INDUCTOR, FERRITE BEAD			
FB918	1-414-760-21	INDUCTOR, FERRITE BEAD			
FB919	1-414-760-21	INDUCTOR, FERRITE BEAD			
FB920	1-414-760-21	INDUCTOR, FERRITE BEAD			
		< FLUORESCENT INDICATOR >			
FL900	1-518-953-11	INDICATOR TUBE, FLUORESCENT			
		< IC >			
IC901	6-803-991-01	IC M30823MH-080GP			
IC902	8-759-523-94	IC TC74VHC32FT(EL)			
IC903	6-600-321-01	IC KSM-401Y (IR)			
IC904	8-759-658-25	IC PST3432UL			
		< COIL >			
L901	1-469-847-11	INDUCTOR	100uH		
		< DIODE >			
LED901	6-500-204-01	LED CL-190UB2-X-T (IMAGE) (F7700)			
LED901	6-500-450-01	LED CL-195SR-CD-T (IMAGE) (F7500)			
LED910	6-500-204-01	LED CL-190UB2-X-T (OFF) (F7700)			
LED910	6-500-450-01	LED CL-195SR-CD-T (OFF) (F7500)			
LED911	6-500-204-01	LED CL-190UB2-X-T (SCRL) (F7700)			
LED911	6-500-450-01	LED CL-195SR-CD-T (SCRL) (F7500)			
LED912	6-500-204-01	LED CL-190UB2-X-T (EQ7) (F7700)			
LED912	6-500-450-01	LED CL-195SR-CD-T (EQ7) (F7500)			
LED913	6-500-204-01	LED CL-190UB2-X-T (SEEK +/▶▶I/▶▶) (F7700)			
LED913	6-500-450-01	LED CL-195SR-CD-T (SEEK +/▶▶I/▶▶) (F7500)			

KEY

Ref. No.	Part No.	Description	Remark
LED914	6-500-204-01	LED CL-190UB2-X-T (DISC/PRESET +)	(F7700)
LED914	6-500-450-01	LED CL-195SR-CD-T (DISC/PRESET +)	(F7500)
LED915	6-500-204-01	LED CL-190UB2-X-T (SEEK –/I◀◀/◀◀)	(F7700)
LED915	6-500-450-01	LED CL-195SR-CD-T (SEEK –/I◀◀/◀◀)	(F7500)
LED916	6-500-204-01	LED CL-190UB2-X-T (DISC/PRESET –)	(F7700)
LED916	6-500-450-01	LED CL-195SR-CD-T (DISC/PRESET –)	(F7500)
LED917	6-500-204-01	LED CL-190UB2-X-T (DSO) (F7700)	
LED917	6-500-450-01	LED CL-195SR-CD-T (DSO) (F7500)	
LED918	6-500-204-01	LED CL-190UB2-X-T (MODE) (F7700)	
LED918	6-500-450-01	LED CL-195SR-CD-T (MODE) (F7500)	
LED919	6-500-204-01	LED CL-190UB2-X-T (VOL1) (F7700)	
LED919	6-500-450-01	LED CL-195SR-CD-T (VOL1) (F7500)	
LED920	6-500-204-01	LED CL-190UB2-X-T (VOL2) (F7700)	
LED920	6-500-450-01	LED CL-195SR-CD-T (VOL2) (F7500)	
LED921	6-500-204-01	LED CL-190UB2-X-T (VOL3) (F7700)	
LED921	6-500-450-01	LED CL-195SR-CD-T (VOL3) (F7500)	
LED922	6-500-204-01	LED CL-190UB2-X-T (VOL4) (F7700)	
LED922	6-500-450-01	LED CL-195SR-CD-T (VOL4) (F7500)	
LED923	6-500-204-01	LED CL-190UB2-X-T (OPEN) (F7700)	
LED923	6-500-450-01	LED CL-195SR-CD-T (OPEN) (F7500)	
LED924	6-500-204-01	LED CL-190UB2-X-T (SOURCE) (F7700)	
LED924	6-500-450-01	LED CL-195SR-CD-T (SOURCE) (F7500)	
		< SWITCH >	
LSW901	1-771-883-31	SWITCH, TACTILE (WITH LED) (SOURCE)	(F7500)
LSW901	1-786-711-11	SWITCH, TACTILE (WITH LED) (SOURCE)	(F7700)
LSW902	1-771-883-31	SWITCH, TACTILE (WITH LED) (AF/TA) (F7500)	
LSW902	1-786-711-11	SWITCH, TACTILE (WITH LED) (AF/TA) (F7700)	
LSW903	1-771-883-31	SWITCH, TACTILE (WITH LED) (6/PAUSE)	(F7500)
LSW903	1-786-711-11	SWITCH, TACTILE (WITH LED) (6/PAUSE)	(F7700)
LSW904	1-771-883-31	SWITCH, TACTILE (WITH LED) (5/BBE MP)	(F7500)
LSW904	1-786-711-11	SWITCH, TACTILE (WITH LED) (5/BBE MP)	(F7700)
LSW905	1-771-883-31	SWITCH, TACTILE (WITH LED) (4) (F7500)	
LSW905	1-786-711-11	SWITCH, TACTILE (WITH LED) (4) (F7700)	
LSW906	1-771-883-31	SWITCH, TACTILE (WITH LED) (3) (F7500)	
LSW906	1-786-711-11	SWITCH, TACTILE (WITH LED) (3) (F7700)	
LSW907	1-771-883-31	SWITCH, TACTILE (WITH LED) (2/SHUF)	(F7500)
LSW907	1-786-711-11	SWITCH, TACTILE (WITH LED) (2/SHUF)	(F7700)
LSW908	1-771-883-31	SWITCH, TACTILE (WITH LED) (1/REP) (F7500)	
LSW908	1-786-711-11	SWITCH, TACTILE (WITH LED) (1/REP) (F7700)	
		< RESISTOR >	
R901	1-219-286-11	RES-CHIP 680 2% 1/16W	
R902	1-219-286-11	RES-CHIP 680 2% 1/16W	
R903	1-219-286-11	RES-CHIP 680 2% 1/16W	
R904	1-218-847-11	METAL CHIP 1K 0.5% 1/10W	
R905	1-218-851-11	METAL CHIP 1.5K 0.5% 1/10W	
R906	1-218-851-11	METAL CHIP 1.5K 0.5% 1/10W	
R907	1-218-855-11	METAL CHIP 2.2K 0.5% 1/10W	
R908	1-218-859-11	METAL CHIP 3.3K 0.5% 1/10W	
R909	1-218-863-11	METAL CHIP 4.7K 0.5% 1/10W	
R910	1-219-286-11	RES-CHIP 680 2% 1/16W	
R911	1-219-286-11	RES-CHIP 680 2% 1/16W	
R912	1-219-286-11	RES-CHIP 680 2% 1/16W	
R913	1-218-847-11	METAL CHIP 1K 0.5% 1/10W	
R914	1-218-851-11	METAL CHIP 1.5K 0.5% 1/10W	
R915	1-218-851-11	METAL CHIP 1.5K 0.5% 1/10W	
R916	1-218-855-11	METAL CHIP 2.2K 0.5% 1/10W	
R917	1-218-859-11	METAL CHIP 3.3K 0.5% 1/10W	
R918	1-216-811-11	METAL CHIP 150 5% 1/10W	(F7700)
R918	1-216-820-11	METAL CHIP 820 5% 1/10W	(F7500)
R919	1-216-820-11	METAL CHIP 820 5% 1/10W	(F7500)
R920	1-216-811-11	METAL CHIP 150 5% 1/10W	(F7700)
R920	1-216-820-11	METAL CHIP 820 5% 1/10W	(F7500)
R921	1-216-820-11	METAL CHIP 820 5% 1/10W	(F7500)
R922	1-216-811-11	METAL CHIP 150 5% 1/10W	(F7700)
R922	1-216-820-11	METAL CHIP 820 5% 1/10W	(F7500)
R923	1-216-820-11	METAL CHIP 820 5% 1/10W	(F7500)
R924	1-216-811-11	METAL CHIP 150 5% 1/10W	(F7700)
R924	1-216-820-11	METAL CHIP 820 5% 1/10W	(F7500)
R925	1-216-820-11	METAL CHIP 820 5% 1/10W	(F7500)
R926	1-216-811-11	METAL CHIP 150 5% 1/10W	(F7700)
R926	1-216-820-11	METAL CHIP 820 5% 1/10W	(F7500)
R927	1-216-820-11	METAL CHIP 820 5% 1/10W	(F7500)
R928	1-216-811-11	METAL CHIP 150 5% 1/10W	(F7700)
R928	1-216-820-11	METAL CHIP 820 5% 1/10W	(F7500)
R929	1-216-820-11	METAL CHIP 820 5% 1/10W	(F7500)
R930	1-216-811-11	METAL CHIP 150 5% 1/10W	(F7700)
R930	1-216-820-11	METAL CHIP 820 5% 1/10W	(F7500)
R931	1-216-820-11	METAL CHIP 820 5% 1/10W	(F7500)
R932	1-216-811-11	METAL CHIP 150 5% 1/10W	(F7700)
R932	1-216-820-11	METAL CHIP 820 5% 1/10W	(F7500)
R933	1-216-820-11	METAL CHIP 820 5% 1/10W	(F7500)

KEY **MAIN**

Ref. No.	Part No.	Description			Remark
R934	1-216-811-11	METAL CHIP	150	5%	1/10W (F7700)
R934	1-216-820-11	METAL CHIP	820	5%	1/10W (F7500)
R935	1-216-820-11	METAL CHIP	820	5%	1/10W (F7500)
R936	1-216-811-11	METAL CHIP	150	5%	1/10W (F7700)
R936	1-216-820-11	METAL CHIP	820	5%	1/10W (F7500)
R937	1-216-820-11	METAL CHIP	820	5%	1/10W (F7500)
R938	1-216-811-11	METAL CHIP	150	5%	1/10W (F7700)
R938	1-216-820-11	METAL CHIP	820	5%	1/10W (F7500)
R939	1-216-820-11	METAL CHIP	820	5%	1/10W (F7500)
R946	1-218-855-11	METAL CHIP	2.2K	0.5%	1/10W
R947	1-218-855-11	METAL CHIP	2.2K	0.5%	1/10W
R953	1-216-845-11	METAL CHIP	100K	5%	1/10W
R954	1-216-845-11	METAL CHIP	100K	5%	1/10W
R955	1-216-845-11	METAL CHIP	100K	5%	1/10W
R958	1-216-845-11	METAL CHIP	100K	5%	1/10W
R959	1-216-845-11	METAL CHIP	100K	5%	1/10W
R960	1-216-845-11	METAL CHIP	100K	5%	1/10W
R961	1-216-005-00	RES-CHIP	15	5%	1/10W
R970	1-216-833-11	METAL CHIP	10K	5%	1/10W
R971	1-216-833-11	METAL CHIP	10K	5%	1/10W
R972	1-216-809-11	METAL CHIP	100	5%	1/10W
R973	1-216-831-11	METAL CHIP	6.8K	5%	1/10W
R975	1-216-845-11	METAL CHIP	100K	5%	1/10W
R976	1-216-819-11	METAL CHIP	680	5%	1/10W
R977	1-216-821-11	METAL CHIP	1K	5%	1/10W
R978	1-218-863-11	METAL CHIP	4.7K	0.5%	1/10W
R979	1-216-821-11	METAL CHIP	1K	5%	1/10W (F7700)
R979	1-216-823-11	METAL CHIP	1.5K	5%	1/10W (F7500)
R980	1-216-821-11	METAL CHIP	1K	5%	1/10W (F7700)
R980	1-216-823-11	METAL CHIP	1.5K	5%	1/10W (F7500)
R981	1-216-823-11	METAL CHIP	1.5K	5%	1/10W (F7500)
R982	1-216-821-11	METAL CHIP	1K	5%	1/10W
R983	1-216-821-11	METAL CHIP	1K	5%	1/10W (F7700)
R983	1-216-823-11	METAL CHIP	1.5K	5%	1/10W (F7500)
R984	1-216-821-11	METAL CHIP	1K	5%	1/10W (F7700)
R984	1-216-823-11	METAL CHIP	1.5K	5%	1/10W (F7500)
R985	1-216-823-11	METAL CHIP	1.5K	5%	1/10W (F7500)
R987	1-216-845-11	METAL CHIP	100K	5%	1/10W
		< SWITCH >			
S902	1-771-884-31	SWITCH, TACTILE (OFF)			
S903	1-771-884-31	SWITCH, TACTILE (SEEK +/ ▶▶I/▶▶)			
S904	1-771-884-31	SWITCH, TACTILE (SEEK –/I◀◀/◀◀)			
S905	1-771-884-31	SWITCH, TACTILE (DISC/PRESET +)			
S906	1-771-884-31	SWITCH, TACTILE (DISC/PRESET –)			
S907	1-771-884-31	SWITCH, TACTILE (MODE)			
S908	1-771-884-31	SWITCH, TACTILE (DSO)			
S909	1-771-884-31	SWITCH, TACTILE (SCRL)			
S910	1-771-884-31	SWITCH, TACTILE (EQ7)			
S912	1-771-884-31	SWITCH, TACTILE (IMAGE)			
		< VIBRATOR >			
X901	1-813-250-11	VIBRATOR, CRYSTAL (SMD) (8MHz)			
**********					
	A-3283-454-A	MAIN BOARD, COMPLETE (F7500)			
	A-3283-460-A	MAIN BOARD, COMPLETE (F7700)			
		**********			
	7-685-134-19	SCREW +P 2.6X8 TYPE2 NON-SLIT			
	7-685-793-09	SCREW +PTT 2.6X8 (S)			
	7-685-795-09	SCREW +PTT 2.6X12 (S)			
		< CAPACITOR >			
C101	1-126-940-11	ELECT	330uF	20%	25V
C102	1-126-960-11	ELECT	1uF	20%	50V
C103	1-131-868-81	ELECT	3300uF	20%	16V
C106	1-115-340-11	CERAMIC CHIP	0.22uF	10%	25V
C110	1-107-826-11	CERAMIC CHIP	0.1uF	10%	16V
C111	1-107-826-11	CERAMIC CHIP	0.1uF	10%	16V
C142	1-162-927-11	CERAMIC CHIP	100PF	5%	50V
C172	1-126-044-11	ELECT	1uF	20%	50V (F7700)
C173	1-124-721-11	ELECT	10uF	20%	50V (F7700)
C173	1-126-964-11	ELECT	10uF	20%	50V (F7500)
C178	1-162-927-11	CERAMIC CHIP	100PF	5%	50V
C182	1-126-044-11	ELECT	1uF	20%	50V (F7700)
C183	1-124-721-11	ELECT	10uF	20%	50V (F7700)
C183	1-126-964-11	ELECT	10uF	20%	50V (F7500)
C188	1-162-927-11	CERAMIC CHIP	100PF	5%	50V
C199	1-162-964-11	CERAMIC CHIP	0.001uF	10%	50V
C201	1-115-467-11	CERAMIC CHIP	0.22uF	10%	10V
C202	1-162-923-11	CERAMIC CHIP	47PF	5%	50V
C203	1-126-961-11	ELECT	2.2uF	20%	50V
C204	1-124-695-11	ELECT	22uF	20%	25V (F7700)
C204	1-126-965-11	ELECT	22uF	20%	25V (F7500)
C205	1-115-340-11	CERAMIC CHIP	0.22uF	10%	25V
C206	1-125-891-11	CERAMIC CHIP	0.47uF	10%	10V
C207	1-125-891-11	CERAMIC CHIP	0.47uF	10%	10V
C208	1-162-927-11	CERAMIC CHIP	100PF	5%	50V
C209	1-162-927-11	CERAMIC CHIP	100PF	5%	50V
C210	1-115-340-11	CERAMIC CHIP	0.22uF	10%	25V
C211	1-165-908-11	CERAMIC CHIP	1uF	10%	10V
C212	1-126-964-11	ELECT	10uF	20%	50V
C214	1-126-964-11	ELECT	10uF	20%	50V

Ref. No.	Part No.	Description			Remark
C215	1-115-340-11	CERAMIC CHIP	0.22uF	10%	25V
C216	1-162-927-11	CERAMIC CHIP	100PF	5%	50V
C217	1-162-927-11	CERAMIC CHIP	100PF	5%	50V
C218	1-125-891-11	CERAMIC CHIP	0.47uF	10%	10V
C219	1-125-891-11	CERAMIC CHIP	0.47uF	10%	10V
C221	1-126-933-11	ELECT	100uF	20%	16V
C223	1-126-964-11	ELECT	10uF	20%	50V
C225	1-125-837-11	CERAMIC CHIP	1uF	10%	6.3V
C226	1-126-964-11	ELECT	10uF	20%	50V
C227	1-115-340-11	CERAMIC CHIP	0.22uF	10%	25V
C242	1-162-927-11	CERAMIC CHIP	100PF	5%	50V
C271	1-126-964-11	ELECT	10uF	20%	50V
C272	1-126-044-11	ELECT	1uF	20%	50V (F7700)
C273	1-124-721-11	ELECT	10uF	20%	50V (F7700)
C273	1-126-964-11	ELECT	10uF	20%	50V (F7500)
C278	1-162-927-11	CERAMIC CHIP	100PF	5%	50V
C282	1-126-044-11	ELECT	1uF	20%	50V (F7700)
C283	1-124-721-11	ELECT	10uF	20%	50V (F7700)
C283	1-126-964-11	ELECT	10uF	20%	50V (F7500)
C288	1-162-927-11	CERAMIC CHIP	100PF	5%	50V
C303	1-126-933-11	ELECT	100uF	20%	16V
C304	1-107-826-11	CERAMIC CHIP	0.1uF	10%	16V
C306	1-126-933-11	ELECT	100uF	20%	16V
C307	1-107-826-11	CERAMIC CHIP	0.1uF	10%	16V
C308	1-126-044-11	ELECT	1uF	20%	50V (F7700)
C308	1-126-960-11	ELECT	1uF	20%	50V (F7500)
C309	1-126-044-11	ELECT	1uF	20%	50V (F7700)
C309	1-126-960-11	ELECT	1uF	20%	50V (F7500)
C311	1-125-710-11	DOUBLE LAYERS	0.1F		5.5V
C312	1-126-933-11	ELECT	100uF	20%	16V
C313	1-164-156-11	CERAMIC CHIP	0.1uF		25V
C315	1-162-919-11	CERAMIC CHIP	22PF	5%	50V
C316	1-162-918-11	CERAMIC CHIP	18PF	5%	50V
C317	1-162-970-11	CERAMIC CHIP	0.01uF	10%	25V
C318	1-165-176-11	CERAMIC CHIP	0.047uF	10%	16V
C319	1-162-970-11	CERAMIC CHIP	0.01uF	10%	25V
C320	1-126-961-11	ELECT	2.2uF	20%	50V
C321	1-126-964-11	ELECT	10uF	20%	50V
C322	1-162-920-11	CERAMIC CHIP	27PF	5%	50V
C323	1-162-920-11	CERAMIC CHIP	27PF	5%	50V
C324	1-126-964-11	ELECT	10uF	20%	50V
C325	1-162-970-11	CERAMIC CHIP	0.01uF	10%	25V
C330	1-162-964-11	CERAMIC CHIP	0.001uF	10%	50V
C332	1-164-156-11	CERAMIC CHIP	0.1uF		25V
C333	1-126-933-11	ELECT	100uF	20%	16V
C334	1-107-826-11	CERAMIC CHIP	0.1uF	10%	16V
C335	1-126-933-11	ELECT	100uF	20%	16V
C336	1-107-826-11	CERAMIC CHIP	0.1uF	10%	16V
C341	1-162-966-11	CERAMIC CHIP	0.0022uF	10%	50V
C342	1-162-966-11	CERAMIC CHIP	0.0022uF	10%	50V
C400	1-124-721-11	ELECT	10uF	20%	50V (F7700)
C401	1-126-947-11	ELECT	47uF	20%	35V
C403	1-125-891-11	CERAMIC CHIP	0.47uF	10%	10V
C416	1-125-837-11	CERAMIC CHIP	1uF	10%	6.3V
C417	1-125-837-11	CERAMIC CHIP	1uF	10%	6.3V
C418	1-124-721-11	ELECT	10uF	20%	50V (F7700)
C418	1-126-964-11	ELECT	10uF	20%	50V (F7500)
C419	1-126-959-11	ELECT	0.47uF	20%	50V
C420	1-126-959-11	ELECT	0.47uF	20%	50V
C421	1-125-837-11	CERAMIC CHIP	1uF	10%	6.3V
C422	1-124-673-11	ELECT	100uF	20%	10V (F7700)
C422	1-126-933-11	ELECT	100uF	20%	16V (F7500)
C423	1-162-970-11	CERAMIC CHIP	0.01uF	10%	25V
C424	1-162-965-11	CERAMIC CHIP	0.0015uF	10%	50V
C425	1-136-154-00	FILM	0.012uF	5%	50V
C426	1-162-927-11	CERAMIC CHIP	100PF	5%	50V
C427	1-162-927-11	CERAMIC CHIP	100PF	5%	50V
C428	1-162-927-11	CERAMIC CHIP	100PF	5%	50V
C429	1-162-927-11	CERAMIC CHIP	100PF	5%	50V
C430	1-162-965-11	CERAMIC CHIP	0.0015uF	10%	50V
C431	1-162-927-11	CERAMIC CHIP	100PF	5%	50V
C432	1-136-154-00	FILM	0.012uF	5%	50V
C433	1-126-960-11	ELECT	1uF	20%	50V
C434	1-126-960-11	ELECT	1uF	20%	50V
C435	1-126-960-11	ELECT	1uF	20%	50V
C436	1-164-156-11	CERAMIC CHIP	0.1uF		25V (F7700)
C437	1-124-673-11	ELECT	100uF	20%	10V (F7700)
C438	1-162-965-11	CERAMIC CHIP	0.0015uF	10%	50V (F7700)
C439	1-162-965-11	CERAMIC CHIP	0.0015uF	10%	50V (F7700)
C440	1-124-673-11	ELECT	100uF	20%	10V (F7700)
C441	1-124-721-11	ELECT	10uF	20%	50V (F7700)
C442	1-162-927-11	CERAMIC CHIP	100PF	5%	50V
C443	1-126-964-11	ELECT	10uF	20%	50V
C444	1-124-721-11	ELECT	10uF	20%	50V (F7700)
C445	1-124-721-11	ELECT	10uF	20%	50V (F7700)
C446	1-124-721-11	ELECT	10uF	20%	50V (F7700)
C447	1-124-721-11	ELECT	10uF	20%	50V (F7700)
C448	1-124-721-11	ELECT	10uF	20%	50V (F7700)
C449	1-124-721-11	ELECT	10uF	20%	50V (F7700)
C450	1-124-721-11	ELECT	10uF	20%	50V (F7700)
C451	1-124-721-11	ELECT	10uF	20%	50V (F7700)

MAIN

Ref. No.	Part No.	Description			Remark
C452	1-164-156-11	CERAMIC CHIP	0.1uF		25V (F7700)
C453	1-164-156-11	CERAMIC CHIP	0.1uF		25V (F7700)
C470	1-126-960-11	ELECT	1uF	20%	50V (F7700)
C475	1-107-826-11	CERAMIC CHIP	0.1uF	10%	16V (F7700)
C501	1-162-970-11	CERAMIC CHIP	0.01uF	10%	25V
C502	1-126-964-11	ELECT	10uF	20%	50V
C503	1-126-963-11	ELECT	4.7uF	20%	50V
C507	1-126-933-11	ELECT	100uF	20%	16V
C508	1-125-837-11	CERAMIC CHIP	1uF	10%	6.3V
C509	1-125-837-11	CERAMIC CHIP	1uF	10%	6.3V
C510	1-135-834-11	CERAMIC CHIP	2.2uF		6.3V
C511	1-162-970-11	CERAMIC CHIP	0.01uF	10%	25V
C550	1-162-926-11	CERAMIC CHIP	82PF	5%	50V
C551	1-162-923-11	CERAMIC CHIP	47PF	5%	50V
C552	1-162-970-11	CERAMIC CHIP	0.01uF	10%	25V
C553	1-126-947-11	ELECT	47uF	20%	35V
C554	1-162-970-11	CERAMIC CHIP	0.01uF	10%	25V
C555	1-135-834-11	CERAMIC CHIP	2.2uF		6.3V
C556	1-164-739-11	CERAMIC CHIP	560PF	5%	50V
C557	1-162-959-11	CERAMIC CHIP	330PF	5%	50V
C558	1-162-965-11	CERAMIC CHIP	0.0015uF	10%	50V
C620	1-104-665-11	ELECT	100uF	20%	25V
C621	1-128-552-11	ELECT	47uF	20%	63V
C622	1-126-934-11	ELECT	220uF	20%	16V
C623	1-126-964-11	ELECT	10uF	20%	50V
C624	1-164-315-11	CERAMIC CHIP	470PF	5%	50V
C625	1-162-966-11	CERAMIC CHIP	0.0022uF	10%	50V
C626	1-107-826-11	CERAMIC CHIP	0.1uF	10%	16V
C627	1-162-923-11	CERAMIC CHIP	47PF	5%	50V
C628	1-107-826-11	CERAMIC CHIP	0.1uF	10%	16V
C629	1-126-933-11	ELECT	100uF	20%	16V
C901	1-126-965-11	ELECT	22uF	20%	50V
C903	1-126-963-11	ELECT	4.7uF	20%	50V
C928	1-164-156-11	CERAMIC CHIP	0.1uF		25V
C930	1-126-965-11	ELECT	22uF	20%	50V
		< CONNECTOR >			
* CN401	1-506-985-11	PIN, CONNECTOR (PC BOARD) 3P			
CN601	1-569-915-11	SOCKET, CONNECTOR 22P			
CNP101	1-774-701-21	PIN, CONNECTOR 16P			
CNP102	1-580-907-41	PLUG, CONNECTOR (BUS CONTROL IN)			
CNP301	1-817-536-11	CONNECTOR, BOARD TO BOARD 28P			
		< JACK >			
CNJ101	1-764-270-21	JACK, STEREO MINIATURE (DIA.3.5)			(REMOTE IN)
		< DIODE >			
D101	8-719-083-66	DIODE UDZS-TE17-18B			
D102	8-719-083-66	DIODE UDZS-TE17-18B			
D103	8-719-420-51	DIODE MA729			
D104	8-719-069-56	DIODE UDZS-TE17-6.2B			
D105	8-719-083-66	DIODE UDZS-TE17-18B			
D106	8-719-978-33	DIODE DTZ-TT11-6.8B			
D108	8-719-083-66	DIODE UDZS-TE17-18B			

Ref. No.	Part No.	Description	Remark
D109	8-719-200-82	DIODE 11ES2	
D110	8-719-053-18	DIODE 1SR154-400TE-25	
D111	8-719-053-18	DIODE 1SR154-400TE-25	
D112	8-719-053-18	DIODE 1SR154-400TE-25	
D113	8-719-053-18	DIODE 1SR154-400TE-25	
D114	8-719-053-18	DIODE 1SR154-400TE-25	
D115	8-719-053-18	DIODE 1SR154-400TE-25	
D116	8-719-053-18	DIODE 1SR154-400TE-25	
D117	8-719-053-18	DIODE 1SR154-400TE-25	
D118	6-500-508-01	DIODE RR263M-400FTR	
D119	6-500-508-01	DIODE RR263M-400FTR	
D120	6-500-508-01	DIODE RR263M-400FTR	
D121	6-500-508-01	DIODE RR263M-400FTR	
D122	8-719-978-33	DIODE DTZ-TT11-6.8B	
D123	8-719-200-82	DIODE 11ES2	
D271	8-719-801-78	DIODE 1SS184	
D275	8-719-420-51	DIODE MA729	
D301	8-719-420-51	DIODE MA729	
D302	8-719-420-51	DIODE MA729	
D305	8-719-988-61	DIODE 1SS355TE-17	
D306	8-719-988-61	DIODE 1SS355TE-17	
D401	8-719-404-50	DIODE MA111-TX	
D403	8-719-069-55	DIODE UDZS-TE17-5.6B	
D501	8-719-069-55	DIODE UDZS-TE17-5.6B	
D601	8-719-978-33	DIODE DTZ-TT11-6.8B	
D602	8-719-978-33	DIODE DTZ-TT11-6.8B	
D603	8-719-978-33	DIODE DTZ-TT11-6.8B	
D604	8-719-978-33	DIODE DTZ-TT11-6.8B	
D605	6-500-886-01	DIODE RSA6.1ENTR	
D606	6-500-886-01	DIODE RSA6.1ENTR	
D620	8-719-053-18	DIODE 1SR154-400TE-25	
D621	8-719-053-18	DIODE 1SR154-400TE-25	
D622	8-719-055-33	DIODE D1FL40	
D623	8-719-055-30	DIODE D1FS4A-TA	
D624	8-719-055-30	DIODE D1FS4A-TA	
D625	8-719-083-66	DIODE UDZS-TE17-18B	
D626	8-719-069-54	DIODE UDZS-TE17-5.1B	
D627	8-719-420-51	DIODE MA729	
D904	8-719-801-78	DIODE 1SS184	
D907	8-719-988-61	DIODE 1SS355TE-17	
D909	8-719-988-61	DIODE 1SS355TE-17	
D910	8-719-069-55	DIODE UDZS-TE17-5.6B	
D911	8-719-420-51	DIODE MA729	
		< FERRITE BEAD >	
FB324	1-414-813-11	FERRITE, EMI (SMD)	
FB325	1-414-813-11	FERRITE, EMI (SMD)	
FB326	1-414-813-11	FERRITE, EMI (SMD)	
FB327	1-414-813-11	FERRITE, EMI (SMD)	
FB328	1-414-813-11	FERRITE, EMI (SMD)	
FB329	1-216-295-11	SHORT CHIP 0	
FB330	1-216-295-11	SHORT CHIP 0	
FB441	1-414-813-11	FERRITE, EMI (SMD)	
FB442	1-414-813-11	FERRITE, EMI (SMD)	
		< IC >	
IC110	8-759-096-16	IC MM1175XFF	
IC201	6-705-359-01	IC TDA8588AJ/N2	

Ref. No.	Part No.	Description	Remark
IC252	8-759-679-05	IC TC7WH34FU(TE12R)	
IC271	6-705-373-01	IC MM3123DPLE	
IC273	8-759-679-05	IC TC7WH34FU(TE12R)	
IC302	8-759-658-25	IC PST3432UL	
IC303	6-803-990-01	IC M30624MGP-123GP	
IC401	6-703-303-01	IC TDA7416	
IC402	6-703-419-01	IC LA2901V-TLM-E (F7700)	
IC431	6-705-720-01	IC RC4580IDR (F7700)	
IC451	6-705-720-01	IC RC4580IDR (F7700)	
IC470	6-705-720-01	IC RC4580IDR (F7700)	
IC550	6-703-809-01	IC SAA6588T/V2-518	
IC620	6-705-542-01	IC NJM2377M(TE2)	
		< JACK >	
J601	1-793-598-11	JACK (ANTENNA)	
		< JUMPER RESISTOR >	
JR301	1-216-864-11	SHORT CHIP 0	
JR302	1-162-927-11	CERAMIC CHIP 100PF 5% 50V	
		< COIL >	
L101	1-456-617-11	COIL, CHOKE 250uH	
L301	1-414-394-41	INDUCTOR 2.2uH	
L302	1-414-394-41	INDUCTOR 2.2uH	
L303	1-414-398-11	INDUCTOR 10uH	
L320	1-414-394-41	INDUCTOR 2.2uH	
L401	1-414-394-41	INDUCTOR 2.2uH	
L501	1-216-296-11	SHORT CHIP 0	
L502	1-414-394-41	INDUCTOR 2.2uH	
L503	1-414-394-41	INDUCTOR 2.2uH	
L620	1-456-729-11	COIL, POWER	
L901	1-414-394-41	INDUCTOR 2.2uH	
		< JACK >	
PJ401	1-774-700-11	JACK, PIN 6P (BUS AUDIO IN, AUDIO OUT REAR/FRONT)	
		< TRANSISTOR >	
Q101	8-729-055-94	TRANSISTOR SRC1202SF	
Q102	8-729-120-28	TRANSISTOR 2SC1623-L5L6	
Q103	8-729-120-28	TRANSISTOR 2SC1623-L5L6	
Q110	8-729-055-91	TRANSISTOR SRA2202SF	
Q111	8-729-055-94	TRANSISTOR SRC1202SF	
Q112	8-729-055-91	TRANSISTOR SRA2202SF	
Q171	6-550-752-01	TRANSISTOR DTC614TKT146	
Q181	6-550-752-01	TRANSISTOR DTC614TKT146	
Q267	8-729-055-94	TRANSISTOR SRC1202SF	
Q270	8-729-053-84	FET SSM3KO9FU(T5LSONY1)	
Q271	6-550-752-01	TRANSISTOR DTC614TKT146	
Q273	8-729-053-84	FET SSM3KO9FU(T5LSONY1)	
Q281	6-550-752-01	TRANSISTOR DTC614TKT146	
Q380	8-729-055-95	TRANSISTOR SRC1204SF	
Q401	8-729-055-95	TRANSISTOR SRC1204SF	
Q402	8-729-055-91	TRANSISTOR SRA2202SF	
Q408	8-729-053-84	FET SSM3KO9FU(T5LSONY1)	
Q450	6-550-752-01	TRANSISTOR DTC614TKT146 (F7700)	
Q451	6-550-752-01	TRANSISTOR DTC614TKT146 (F7700)	
Q452	6-550-752-01	TRANSISTOR DTC614TKT146 (F7700)	
Q453	6-550-752-01	TRANSISTOR DTC614TKT146 (F7700)	
Q470	6-550-752-01	TRANSISTOR DTC614TKT146	
Q501	8-729-920-85	TRANSISTOR 2SD1664-QR	
Q601	8-729-055-91	TRANSISTOR SRA2202SF	
Q602	8-729-055-95	TRANSISTOR SRC1204SF	
Q620	8-729-048-72	FET 2SK2615	
Q621	8-729-055-91	TRANSISTOR SRA2202SF	
Q622	8-729-055-95	TRANSISTOR SRC1204SF	
Q623	8-729-055-95	TRANSISTOR SRC1204SF	
Q624	6-550-828-01	FET RSQ035P03TR	
Q907	8-729-120-28	TRANSISTOR 2SC1623-L5L6	
Q914	8-729-055-91	TRANSISTOR SRA2202SF	
Q915	8-729-015-11	TRANSISTOR 2SD1802FAST-TL	
Q916	8-729-055-94	TRANSISTOR SRC1202SF	
		< RESISTOR >	
R101	1-216-077-11	RES-CHIP 15K 5% 1/10W	
R102	1-216-049-11	RES-CHIP 1K 5% 1/10W	
R103	1-216-821-11	METAL CHIP 1K 5% 1/10W	
R104	1-216-829-11	METAL CHIP 4.7K 5% 1/10W	
R105	1-216-841-11	METAL CHIP 47K 5% 1/10W	
R106	1-216-841-11	METAL CHIP 47K 5% 1/10W	
R107	1-216-073-00	RES-CHIP 10K 5% 1/10W	
R108	1-216-073-00	RES-CHIP 10K 5% 1/10W	
R109	1-216-833-11	METAL CHIP 10K 5% 1/10W	
R110	1-216-833-11	METAL CHIP 10K 5% 1/10W	
R111	1-216-841-11	METAL CHIP 47K 5% 1/10W	
R112	1-216-821-11	METAL CHIP 1K 5% 1/10W	
R114	1-216-809-11	METAL CHIP 100 5% 1/10W	
R115	1-216-809-11	METAL CHIP 100 5% 1/10W	
R116	1-216-809-11	METAL CHIP 100 5% 1/10W	
R117	1-216-797-11	METAL CHIP 10 5% 1/10W	
R118	1-216-829-11	METAL CHIP 4.7K 5% 1/10W	
R142	1-216-825-11	METAL CHIP 2.2K 5% 1/10W	
R143	1-216-833-11	METAL CHIP 10K 5% 1/10W	
R172	1-216-295-11	SHORT CHIP 0 (F7500)	
R174	1-216-809-11	METAL CHIP 100 5% 1/10W (F7500)	
R174	1-216-813-11	METAL CHIP 220 5% 1/10W (F7700)	
R175	1-216-841-11	METAL CHIP 47K 5% 1/10W	
R182	1-216-295-11	SHORT CHIP 0 (F7500)	
R184	1-216-809-11	METAL CHIP 100 5% 1/10W (F7500)	
R184	1-216-813-11	METAL CHIP 220 5% 1/10W (F7700)	
R185	1-216-841-11	METAL CHIP 47K 5% 1/10W	
R201	1-216-841-11	METAL CHIP 47K 5% 1/10W	
R202	1-216-809-11	METAL CHIP 100 5% 1/10W	
R203	1-216-821-11	METAL CHIP 1K 5% 1/10W	
R204	1-216-821-11	METAL CHIP 1K 5% 1/10W	
R205	1-216-821-11	METAL CHIP 1K 5% 1/10W	
R206	1-216-821-11	METAL CHIP 1K 5% 1/10W	
R240	1-216-049-11	RES-CHIP 1K 5% 1/10W	
R241	1-216-049-11	RES-CHIP 1K 5% 1/10W	
R242	1-216-825-11	METAL CHIP 2.2K 5% 1/10W	
R243	1-216-833-11	METAL CHIP 10K 5% 1/10W	
R267	1-216-845-11	METAL CHIP 100K 5% 1/10W	

MAIN

Ref. No.	Part No.	Description			Remark
R270	1-216-837-11	METAL CHIP	22K	5%	1/10W
R271	1-216-845-11	METAL CHIP	100K	5%	1/10W
R272	1-216-295-11	SHORT CHIP	0 (F7500)		
R273	1-216-837-11	METAL CHIP	22K	5%	1/10W
R274	1-216-809-11	METAL CHIP	100	5%	1/10W (F7500)
R274	1-216-813-11	METAL CHIP	220	5%	1/10W (F7700)
R275	1-216-841-11	METAL CHIP	47K	5%	1/10W
R282	1-216-295-11	SHORT CHIP	0 (F7500)		
R284	1-216-809-11	METAL CHIP	100	5%	1/10W (F7500)
R284	1-216-813-11	METAL CHIP	220	5%	1/10W (F7700)
R285	1-216-841-11	METAL CHIP	47K	5%	1/10W
R300	1-216-864-11	SHORT CHIP	0		
R301	1-216-864-11	SHORT CHIP	0		
R302	1-216-845-11	METAL CHIP	100K	5%	1/10W
R304	1-216-845-11	METAL CHIP	100K	5%	1/10W
R311	1-216-845-11	METAL CHIP	100K	5%	1/10W
R312	1-216-845-11	METAL CHIP	100K	5%	1/10W
R314	1-216-845-11	METAL CHIP	100K	5%	1/10W
R319	1-216-821-11	METAL CHIP	1K	5%	1/10W
R322	1-216-827-11	METAL CHIP	3.3K	5%	1/10W
R323	1-216-827-11	METAL CHIP	3.3K	5%	1/10W
R326	1-216-853-11	METAL CHIP	470K	5%	1/10W
R330	1-216-845-11	METAL CHIP	100K	5%	1/10W
R332	1-218-871-11	METAL CHIP	10K	0.5%	1/10W
R333	1-216-809-11	METAL CHIP	100	5%	1/10W
R335	1-216-837-11	METAL CHIP	22K	5%	1/10W
R341	1-216-845-11	METAL CHIP	100K	5%	1/10W
R342	1-216-833-11	METAL CHIP	10K	5%	1/10W
R343	1-216-845-11	METAL CHIP	100K	5%	1/10W
R344	1-216-833-11	METAL CHIP	10K	5%	1/10W
R345	1-216-833-11	METAL CHIP	10K	5%	1/10W
R346	1-216-833-11	METAL CHIP	10K	5%	1/10W
R350	1-216-809-11	METAL CHIP	100	5%	1/10W
R351	1-216-809-11	METAL CHIP	100	5%	1/10W
R356	1-218-871-11	METAL CHIP	10K	0.5%	1/10W
R357	1-218-871-11	METAL CHIP	10K	0.5%	1/10W
R361	1-216-845-11	METAL CHIP	100K	5%	1/10W
R363	1-216-845-11	METAL CHIP	100K	5%	1/10W
R364	1-216-845-11	METAL CHIP	100K	5%	1/10W
R365	1-216-845-11	METAL CHIP	100K	5%	1/10W
R366	1-216-845-11	METAL CHIP	100K	5%	1/10W
R367	1-216-845-11	METAL CHIP	100K	5%	1/10W
R369	1-216-845-11	METAL CHIP	100K	5%	1/10W
R370	1-216-845-11	METAL CHIP	100K	5%	1/10W (F7500)
R371	1-216-845-11	METAL CHIP	100K	5%	1/10W (F7700)
R377	1-216-845-11	METAL CHIP	100K	5%	1/10W
R380	1-216-809-11	METAL CHIP	100	5%	1/10W
R381	1-216-845-11	METAL CHIP	100K	5%	1/10W
R385	1-216-864-11	SHORT CHIP	0		
R391	1-216-845-11	METAL CHIP	100K	5%	1/10W
R393	1-216-845-11	METAL CHIP	100K	5%	1/10W
R401	1-216-017-11	RES-CHIP	47	5%	1/10W
R402	1-216-813-11	METAL CHIP	220	5%	1/10W (F7700)
R402	1-216-864-11	SHORT CHIP	0 (F7500)		
R403	1-216-295-11	SHORT CHIP	0		
R407	1-216-841-11	METAL CHIP	47K	5%	1/10W
R408	1-216-809-11	METAL CHIP	100	5%	1/10W
R410	1-216-295-11	SHORT CHIP	0		
R414	1-216-833-11	METAL CHIP	10K	5%	1/10W
R415	1-216-833-11	METAL CHIP	10K	5%	1/10W
R416	1-216-809-11	METAL CHIP	100	5%	1/10W
R417	1-216-809-11	METAL CHIP	100	5%	1/10W
R418	1-216-809-11	METAL CHIP	100	5%	1/10W
R419	1-216-809-11	METAL CHIP	100	5%	1/10W
R420	1-216-833-11	METAL CHIP	10K	5%	1/10W
R421	1-216-833-11	METAL CHIP	10K	5%	1/10W
R422	1-216-813-11	METAL CHIP	220	5%	1/10W
R424	1-216-825-11	METAL CHIP	2.2K	5%	1/10W
R426	1-216-864-11	SHORT CHIP	0		
R427	1-216-864-11	SHORT CHIP	0		
R429	1-216-086-00	RES-CHIP	36K	5%	1/10W (F7700)
R429	1-216-295-11	SHORT CHIP	0 (F7500)		
R430	1-216-082-00	RES-CHIP	24K	5%	1/10W (F7700)
R431	1-216-086-00	RES-CHIP	36K	5%	1/10W (F7700)
R431	1-216-295-11	SHORT CHIP	0 (F7500)		
R432	1-216-082-00	RES-CHIP	24K	5%	1/10W (F7700)
R433	1-216-086-00	RES-CHIP	36K	5%	1/10W (F7700)
R433	1-216-295-11	SHORT CHIP	0 (F7500)		
R434	1-216-082-00	RES-CHIP	24K	5%	1/10W (F7700)
R435	1-216-086-00	RES-CHIP	36K	5%	1/10W (F7700)
R435	1-216-295-11	SHORT CHIP	0 (F7500)		
R436	1-216-082-00	RES-CHIP	24K	5%	1/10W (F7700)
R437	1-216-833-11	METAL CHIP	10K	5%	1/10W (F7700)
R438	1-216-835-11	METAL CHIP	15K	5%	1/10W (F7700)
R443	1-216-864-11	SHORT CHIP	0 (F7500)		
R444	1-216-864-11	SHORT CHIP	0 (F7500)		
R445	1-216-864-11	SHORT CHIP	0 (F7500)		
R446	1-216-864-11	SHORT CHIP	0 (F7500)		
R447	1-216-845-11	METAL CHIP	100K	5%	1/10W (F7700)
R448	1-216-845-11	METAL CHIP	100K	5%	1/10W (F7700)
R449	1-216-835-11	METAL CHIP	15K	5%	1/10W (F7700)
R450	1-216-833-11	METAL CHIP	10K	5%	1/10W (F7700)
R451	1-216-835-11	METAL CHIP	15K	5%	1/10W (F7700)
R452	1-216-833-11	METAL CHIP	10K	5%	1/10W (F7700)
R453	1-216-845-11	METAL CHIP	100K	5%	1/10W (F7700)

Ref. No.	Part No.	Description			Remark
R454	1-216-845-11	METAL CHIP	100K	5%	1/10W (F7700)
R455	1-216-835-11	METAL CHIP	15K	5%	1/10W (F7700)
R456	1-216-833-11	METAL CHIP	10K	5%	1/10W (F7700)
R457	1-216-813-11	METAL CHIP	220	5%	1/10W (F7700)
R458	1-216-813-11	METAL CHIP	220	5%	1/10W (F7700)
R459	1-216-813-11	METAL CHIP	220	5%	1/10W (F7700)
R460	1-216-813-11	METAL CHIP	220	5%	1/10W (F7700)
R461	1-216-841-11	METAL CHIP	47K	5%	1/10W (F7700)
R462	1-216-841-11	METAL CHIP	47K	5%	1/10W (F7700)
R463	1-216-841-11	METAL CHIP	47K	5%	1/10W (F7700)
R464	1-216-841-11	METAL CHIP	47K	5%	1/10W (F7700)
R465	1-216-864-11	SHORT CHIP	0 (F7700)		
R471	1-216-864-11	SHORT CHIP	0 (F7700)		
R472	1-216-835-11	METAL CHIP	15K	5%	1/10W (F7700)
R473	1-216-833-11	METAL CHIP	10K	5%	1/10W (F7700)
R477	1-216-841-11	METAL CHIP	47K	5%	1/10W (F7700)
R478	1-216-864-11	SHORT CHIP	0 (F7500)		
R501	1-216-821-11	METAL CHIP	1K	5%	1/10W
R502	1-216-864-11	SHORT CHIP	0		
R504	1-216-864-11	SHORT CHIP	0		
R550	1-216-827-11	METAL CHIP	3.3K	5%	1/10W
R551	1-216-817-11	METAL CHIP	470	5%	1/10W
R552	1-216-797-11	METAL CHIP	10	5%	1/10W
R553	1-216-797-11	METAL CHIP	10	5%	1/10W
R600	1-216-295-11	SHORT CHIP	0		
R601	1-216-029-00	RES-CHIP	150	5%	1/10W
R602	1-216-029-00	RES-CHIP	150	5%	1/10W
R603	1-216-029-00	RES-CHIP	150	5%	1/10W
R620	1-216-230-00	RES-CHIP	22K	5%	1/8W
R621	1-216-230-00	RES-CHIP	22K	5%	1/8W
R622	1-218-863-11	METAL CHIP	4.7K	0.5%	1/10W
R623	1-218-895-11	METAL CHIP	100K	0.5%	1/10W
R624	1-218-847-11	METAL CHIP	1K	0.5%	1/10W
R625	1-216-025-11	RES-CHIP	100	5%	1/10W
R626	1-216-848-11	METAL CHIP	180K	5%	1/10W
R627	1-216-846-11	METAL CHIP	120K	5%	1/10W
R628	1-216-841-11	METAL CHIP	47K	5%	1/10W
R629	1-216-833-11	METAL CHIP	10K	5%	1/10W
R630	1-216-837-11	METAL CHIP	22K	5%	1/10W
R631	1-216-833-11	METAL CHIP	10K	5%	1/10W
R632	1-216-841-11	METAL CHIP	47K	5%	1/10W
R633	1-216-809-11	METAL CHIP	100	5%	1/10W
R634	1-216-833-11	METAL CHIP	10K	5%	1/10W
R635	1-216-864-11	SHORT CHIP	0		
R636	1-216-839-11	METAL CHIP	33K	5%	1/10W
R642	1-216-296-11	SHORT CHIP	0		
R643	1-216-296-11	SHORT CHIP	0		
R910	1-216-845-11	METAL CHIP	100K	5%	1/10W
R920	1-216-073-00	RES-CHIP	10K	5%	1/10W
R921	1-216-073-00	RES-CHIP	10K	5%	1/10W
R922	1-216-845-11	METAL CHIP	100K	5%	1/10W
R929	1-216-837-11	METAL CHIP	22K	5%	1/10W
R949	1-216-057-00	RES-CHIP	2.2K	5%	1/10W
R950	1-216-057-00	RES-CHIP	2.2K	5%	1/10W
		< SWITCH >			
S300	1-786-458-11	SWITCH, PUSH (1 KEY) (NOSE DET)			
S301	1-762-638-21	SWITCH, TACTILE (RESET)			
		< TRANSFORMER >			
T620	1-443-212-11	TRANSFORMER, DC-DC CONVERTER			
		< THERMISTOR (POSITIVE) >			
TH100	1-801-792-21	THERMISTOR, POSITIVE			
		< TUNER >			
TUX501	A-3220-961-A	TUNER UNIT (TUX-032//Q3)			
		< VIBRATOR >			
X301	1-813-202-11	VIBRATOR, CRYSTAL (32.768kHz)			
X302	1-813-254-11	VIBRATOR, CRYSTAL (6MHz)			
X550	1-579-900-21	VIBRATOR, CRYSTAL (4.332MHz)			
**********					
		SENSOR BOARD			
		**********			
		< SWITCH >			
SW2	1-529-566-61	SWITCH, PUSH (1 KEY) (SELF)			
SW3	1-529-566-61	SWITCH, PUSH (1 KEY) (DISC IN)			
**********					
	A-3283-359-A	SERVO BOARD, COMPLETE			
		**********			
		< CAPACITOR >			
C1	1-162-970-11	CERAMIC CHIP	0.01uF	10%	25V
C2	1-162-970-11	CERAMIC CHIP	0.01uF	10%	25V
C3	1-162-970-11	CERAMIC CHIP	0.01uF	10%	25V
C4	1-162-970-11	CERAMIC CHIP	0.01uF	10%	25V
C5	1-107-826-11	CERAMIC CHIP	0.1uF	10%	16V
C6	1-162-970-11	CERAMIC CHIP	0.01uF	10%	25V
C7	1-162-962-11	CERAMIC CHIP	470PF	10%	50V
C8	1-162-962-11	CERAMIC CHIP	470PF	10%	50V
C10	1-104-609-11	ELECT CHIP	100uF	20%	4V
C11	1-107-826-11	CERAMIC CHIP	0.1uF	10%	16V
C13	1-162-965-11	CERAMIC CHIP	0.0015uF	10%	50V
C14	1-162-965-11	CERAMIC CHIP	0.0015uF	10%	50V
C16	1-107-826-11	CERAMIC CHIP	0.1uF	10%	16V
C18	1-164-227-11	CERAMIC CHIP	0.022uF	10%	25V
C19	1-164-227-11	CERAMIC CHIP	0.022uF	10%	25V
C21	1-107-826-11	CERAMIC CHIP	0.1uF	10%	16V
C22	1-162-962-11	CERAMIC CHIP	470PF	10%	50V
C23	1-162-967-11	CERAMIC CHIP	0.0033uF	10%	50V

SERVO

Ref. No.	Part No.	Description			Remark
C24	1-162-962-11	CERAMIC CHIP	470PF	10%	50V
C25	1-162-967-11	CERAMIC CHIP	0.0033uF	10%	50V
C26	1-162-970-11	CERAMIC CHIP	0.01uF	10%	25V
C27	1-126-208-21	ELECT CHIP	47uF	20%	4V
C28	1-107-826-11	CERAMIC CHIP	0.1uF	10%	16V
C29	1-164-156-11	CERAMIC CHIP	0.1uF		25V
C30	1-107-826-11	CERAMIC CHIP	0.1uF	10%	16V
C32	1-164-156-11	CERAMIC CHIP	0.1uF		25V
C33	1-164-156-11	CERAMIC CHIP	0.1uF		25V
C34	1-107-826-11	CERAMIC CHIP	0.1uF	10%	16V
C35	1-107-826-11	CERAMIC CHIP	0.1uF	10%	16V
C36	1-162-970-11	CERAMIC CHIP	0.01uF	10%	25V
C37	1-164-677-11	CERAMIC CHIP	0.033uF	10%	16V
C38	1-107-826-11	CERAMIC CHIP	0.1uF	10%	16V
C39	1-162-927-11	CERAMIC CHIP	100PF	5%	50V
C40	1-162-969-11	CERAMIC CHIP	0.0068uF	10%	25V
C41	1-164-156-11	CERAMIC CHIP	0.1uF		25V
C42	1-162-970-11	CERAMIC CHIP	0.01uF	10%	25V
C43	1-125-837-11	CERAMIC CHIP	1uF	10%	6.3V
C44	1-162-970-11	CERAMIC CHIP	0.01uF	10%	25V
C45	1-162-970-11	CERAMIC CHIP	0.01uF	10%	25V
C46	1-162-965-11	CERAMIC CHIP	0.0015uF	10%	50V
C47	1-107-826-11	CERAMIC CHIP	0.1uF	10%	16V
C48	1-104-609-11	ELECT CHIP	100uF	20%	4V
C49	1-125-837-11	CERAMIC CHIP	1uF	10%	6.3V
C50	1-125-837-11	CERAMIC CHIP	1uF	10%	6.3V
C51	1-164-156-11	CERAMIC CHIP	0.1uF		25V
C52	1-100-381-11	ELECT CHIP	10uF	20%	16V
C53	1-100-381-11	ELECT CHIP	10uF	20%	16V
C54	1-164-156-11	CERAMIC CHIP	0.1uF		25V
C55	1-164-156-11	CERAMIC CHIP	0.1uF		25V
C56	1-162-970-11	CERAMIC CHIP	0.01uF	10%	25V
C57	1-164-156-11	CERAMIC CHIP	0.1uF		25V
C58	1-107-826-11	CERAMIC CHIP	0.1uF	10%	16V
C59	1-107-826-11	CERAMIC CHIP	0.1uF	10%	16V
C60	1-100-381-11	ELECT CHIP	10uF	20%	16V
C63	1-162-970-11	CERAMIC CHIP	0.01uF	10%	25V
C64	1-107-826-11	CERAMIC CHIP	0.1uF	10%	16V
C65	1-126-208-21	ELECT CHIP	47uF	20%	4V
C66	1-164-156-11	CERAMIC CHIP	0.1uF		25V
C67	1-107-826-11	CERAMIC CHIP	0.1uF	10%	16V
C74	1-126-208-21	ELECT CHIP	47uF	20%	4V
C75	1-162-970-11	CERAMIC CHIP	0.01uF	10%	25V
C77	1-107-826-11	CERAMIC CHIP	0.1uF	10%	16V
C79	1-107-826-11	CERAMIC CHIP	0.1uF	10%	16V
C83	1-107-826-11	CERAMIC CHIP	0.1uF	10%	16V
C85	1-125-837-11	CERAMIC CHIP	1uF	10%	6.3V
C86	1-107-826-11	CERAMIC CHIP	0.1uF	10%	16V
C91	1-107-826-11	CERAMIC CHIP	0.1uF	10%	16V
C92	1-107-826-11	CERAMIC CHIP	0.1uF	10%	16V
C109	1-107-826-11	CERAMIC CHIP	0.1uF	10%	16V
C110	1-107-826-11	CERAMIC CHIP	0.1uF	10%	16V
C115	1-162-966-11	CERAMIC CHIP	0.0022uF	10%	50V
		< CONNECTOR >			
CN1	1-794-153-21	CONNECTOR, FPC (ZIF) 16P			
CN2	1-817-275-21	CONNECTOR, BOARD TO BOARD 28P			

Ref. No.	Part No.	Description			Remark
		< JUMPER RESISTOR >			
FB1	1-216-864-11	SHORT CHIP	0		
FB2	1-216-864-11	SHORT CHIP	0		
FB5	1-216-864-11	SHORT CHIP	0		
		< IC >			
IC1	6-705-366-01	IC LA6560-TE-L-E			
IC3	8-753-216-86	IC CXD3059BR			
IC4	6-804-028-02	IC MB90487PFV-G-107-BNDE1			
IC7	6-705-364-01	IC R1114N151D-TR-FA			
IC8	6-705-365-01	IC TC94A34FG-002			
		< TRANSISTOR >			
Q1	8-729-904-87	TRANSISTOR	2SB1197K-R		
Q2	8-729-928-90	TRANSISTOR	DTC114EE		
Q3	8-729-904-87	TRANSISTOR	2SB1197K-R		
Q5	8-729-904-87	TRANSISTOR	2SB1197K-R		
Q6	8-729-928-90	TRANSISTOR	DTC114EE		
		< RESISTOR >			
R1	1-218-941-81	RES-CHIP	100	5%	1/16W
R2	1-218-971-11	RES-CHIP	33K	5%	1/16W
R3	1-218-971-11	RES-CHIP	33K	5%	1/16W
R4	1-218-965-11	RES-CHIP	10K	5%	1/16W
R5	1-218-965-11	RES-CHIP	10K	5%	1/16W
R6	1-218-965-11	RES-CHIP	10K	5%	1/16W
R7	1-208-635-11	METAL CHIP	10	0.5%	1/16W
R8	1-218-971-11	RES-CHIP	33K	5%	1/16W
R9	1-218-971-11	RES-CHIP	33K	5%	1/16W
R10	1-218-965-11	RES-CHIP	10K	5%	1/16W
R11	1-218-965-11	RES-CHIP	10K	5%	1/16W
R12	1-208-635-11	METAL CHIP	10	0.5%	1/16W
R13	1-218-965-11	RES-CHIP	10K	5%	1/16W
R14	1-218-990-11	SHORT CHIP	0		
R15	1-218-990-11	SHORT CHIP	0		
R16	1-218-990-11	SHORT CHIP	0		
R17	1-218-965-11	RES-CHIP	10K	5%	1/16W
R18	1-218-965-11	RES-CHIP	10K	5%	1/16W
R19	1-218-969-11	RES-CHIP	22K	5%	1/16W
R20	1-218-969-11	RES-CHIP	22K	5%	1/16W
R21	1-218-990-11	SHORT CHIP	0		
R22	1-218-967-11	RES-CHIP	15K	5%	1/16W
R23	1-218-967-11	RES-CHIP	15K	5%	1/16W
R24	1-218-953-11	RES-CHIP	1K	5%	1/16W
R25	1-218-953-11	RES-CHIP	1K	5%	1/16W
R26	1-218-981-11	RES-CHIP	220K	5%	1/16W
R27	1-218-965-11	RES-CHIP	10K	5%	1/16W
R28	1-218-990-11	SHORT CHIP	0		
R29	1-218-977-11	RES-CHIP	100K	5%	1/16W
R37	1-218-990-11	SHORT CHIP	0		
R38	1-218-967-11	RES-CHIP	15K	5%	1/16W
R39	1-218-941-81	RES-CHIP	100	5%	1/16W
R40	1-218-990-11	SHORT CHIP	0		
R41	1-218-985-11	RES-CHIP	470K	5%	1/16W
R42	1-218-965-11	RES-CHIP	10K	5%	1/16W
R43	1-218-977-11	RES-CHIP	100K	5%	1/16W
R44	1-218-957-11	RES-CHIP	2.2K	5%	1/16W
R45	1-218-971-11	RES-CHIP	33K	5%	1/16W

Ref. No.	Part No.	Description			Remark
R46	1-218-957-11	RES-CHIP	2.2K	5%	1/16W
R47	1-218-977-11	RES-CHIP	100K	5%	1/16W
R48	1-218-941-81	RES-CHIP	100	5%	1/16W
R49	1-218-953-11	RES-CHIP	1K	5%	1/16W
R50	1-218-941-81	RES-CHIP	100	5%	1/16W
R52	1-218-941-81	RES-CHIP	100	5%	1/16W
R53	1-218-959-11	RES-CHIP	3.3K	5%	1/16W
R54	1-218-961-11	RES-CHIP	4.7K	5%	1/16W
R55	1-218-953-11	RES-CHIP	1K	5%	1/16W
R56	1-218-973-11	RES-CHIP	47K	5%	1/16W
R57	1-218-941-81	RES-CHIP	100	5%	1/16W
R59	1-218-941-81	RES-CHIP	100	5%	1/16W
R60	1-218-990-11	SHORT CHIP	0		
R61	1-218-985-11	RES-CHIP	470K	5%	1/16W
R62	1-218-965-11	RES-CHIP	10K	5%	1/16W
R64	1-218-941-81	RES-CHIP	100	5%	1/16W
R65	1-218-941-81	RES-CHIP	100	5%	1/16W
R67	1-218-941-81	RES-CHIP	100	5%	1/16W
R68	1-218-990-11	SHORT CHIP	0		
R69	1-218-973-11	RES-CHIP	47K	5%	1/16W
R70	1-218-945-11	RES-CHIP	220	5%	1/16W
R71	1-218-941-81	RES-CHIP	100	5%	1/16W
R72	1-218-990-11	SHORT CHIP	0		
R73	1-218-941-81	RES-CHIP	100	5%	1/16W
R74	1-218-941-81	RES-CHIP	100	5%	1/16W
R76	1-218-941-81	RES-CHIP	100	5%	1/16W
R77	1-218-947-11	RES-CHIP	330	5%	1/16W
R78	1-218-941-81	RES-CHIP	100	5%	1/16W
R79	1-218-941-81	RES-CHIP	100	5%	1/16W
R80	1-218-977-11	RES-CHIP	100K	5%	1/16W
R81	1-218-941-81	RES-CHIP	100	5%	1/16W
R85	1-218-973-11	RES-CHIP	47K	5%	1/16W
R86	1-218-973-11	RES-CHIP	47K	5%	1/16W
R87	1-218-973-11	RES-CHIP	47K	5%	1/16W
R91	1-220-200-81	RES-CHIP	30K	5%	1/16W
R92	1-218-971-11	RES-CHIP	33K	5%	1/16W
R96	1-218-990-11	SHORT CHIP	0		
R97	1-218-941-81	RES-CHIP	100	5%	1/16W
R98	1-218-941-81	RES-CHIP	100	5%	1/16W
R99	1-218-965-11	RES-CHIP	10K	5%	1/16W
R101	1-218-969-11	RES-CHIP	22K	5%	1/16W
R102	1-218-990-11	SHORT CHIP	0		
R106	1-218-969-11	RES-CHIP	22K	5%	1/16W
R107	1-218-965-11	RES-CHIP	10K	5%	1/16W
R108	1-218-941-81	RES-CHIP	100	5%	1/16W
R109	1-218-953-11	RES-CHIP	1K	5%	1/16W
R110	1-218-945-11	RES-CHIP	220	5%	1/16W
R111	1-218-990-11	SHORT CHIP	0		
R114	1-218-941-81	RES-CHIP	100	5%	1/16W
R115	1-218-941-81	RES-CHIP	100	5%	1/16W
R116	1-218-941-81	RES-CHIP	100	5%	1/16W
R117	1-218-990-11	SHORT CHIP	0		
R119	1-218-941-81	RES-CHIP	100	5%	1/16W
R122	1-218-965-11	RES-CHIP	10K	5%	1/16W
R123	1-218-990-11	SHORT CHIP	0		
R124	1-216-864-11	SHORT CHIP	0		
R126	1-218-965-11	RES-CHIP	10K	5%	1/16W
R127	1-218-965-11	RES-CHIP	10K	5%	1/16W
R128	1-218-965-11	RES-CHIP	10K	5%	1/16W
R129	1-218-965-11	RES-CHIP	10K	5%	1/16W
R133	1-216-864-11	SHORT CHIP	0		
R136	1-218-977-11	RES-CHIP	100K	5%	1/16W
R139	1-218-957-11	RES-CHIP	2.2K	5%	1/16W
R140	1-218-941-81	RES-CHIP	100	5%	1/16W
R141	1-218-941-81	RES-CHIP	100	5%	1/16W
R142	1-218-941-81	RES-CHIP	100	5%	1/16W
R143	1-218-941-81	RES-CHIP	100	5%	1/16W
R144	1-218-965-11	RES-CHIP	10K	5%	1/16W
R145	1-218-977-11	RES-CHIP	100K	5%	1/16W
R146	1-218-941-81	RES-CHIP	100	5%	1/16W
R147	1-218-941-81	RES-CHIP	100	5%	1/16W
R148	1-218-941-81	RES-CHIP	100	5%	1/16W
		< SWITCH >			
SW1	1-529-565-61	SWITCH, PUSH (1 KEY) (DOWN)			
		< VIBRATOR >			
X1	1-795-561-21	VIBRATOR, CERAMIC (16.9344MHz)			
X2	1-795-822-21	VIBRATOR, CERAMIC (18.43MHz)			
**********					
		SUB BOARD			
		**********			
	1-828-511-11	CABLE, FLAT (FFC) 22P			
		< CONNECTOR >			
CNP501	1-818-142-11	SOCKET, CONNECTOR 20P			
		< DIODE >			
D990	8-719-978-33	DIODE DTZ-TT11-6.8B (F7700)			
D991	8-719-978-33	DIODE DTZ-TT11-6.8B (F7700)			
LED931	6-500-895-01	LED CL-270UB2-X-TS (WINDOW) (F7700)			
LED931	8-719-082-38	LED CL-270SR-C-TS (WINDOW) (F7500)			
LED932	6-500-204-01	LED CL-190UB2-X-T (⏏) (F7700)			
LED932	6-500-450-01	LED CL-195SR-CD-T (⏏) (F7500)			
		< RESISTOR >			
R990	1-216-809-11	METAL CHIP	100	5%	1/10W (F7700)
R990	1-216-817-11	METAL CHIP	470	5%	1/10W (F7500)
R991	1-216-817-11	METAL CHIP	470	5%	1/10W (F7500)
		< SWITCH >			
S901	1-771-884-31	SWITCH, TACTILE (⏏)			
**********					

Ref. No.	Part No.	Description	Remark
		MISCELLANEOUS	
		**********	
10	1-790-375-12	CORD (WITH CONNECTOR) (SUB OUT (MONO))	
12	1-776-527-71	CORD (WITH CONNECTOR) (ISO) (POWER)	(AEP,UK)
12	1-776-207-72	CORD (WITH CONNECTOR) (E)	
⚠153	8-820-207-02	OPTICAL PICK-UP (KSS1000E/K1RP)	
154	A-3337-640-A	CHASSIS (OP) SUB ASSY (including M901)	
F901	1-532-877-11	FUSE (BLADE TYPE) (AUTO FUSE) 10A	
M902	A-3337-638-A	MOTOR ASSY, SL (SLED)	
M903	A-3372-454-A	MOTOR ASSY, LE (LOADING)	
SW4	1-571-099-11	SWITCH (1 KEY) (LIMIT)	
**********			
		ACCESSORIES	
		**********	
	1-477-110-51	REMOTE COMMANDER (RM-X140)	
	3-230-047-01	LID, BATTERY CASE (for RM-X140)	
	3-263-381-21	MANUAL, INSTRUCTION (ENGLISH, TRADITIONAL CHINESE)	(E)
	3-263-381-31	MANUAL, INSTRUCTION (ENGLISH,GERMAN, FRENCH,ITALIAN,DUTCH)	(AEP,UK)
	3-263-425-21	MANUAL, INSTRUCTION, INSTALL (ENGLISH, TRADITIONAL CHINESE)	(E)
	3-263-425-31	MANUAL, INSTRUCTION, INSTALL (ENGLISH, GERMAN,FRENCH,ITALIAN,DUTCH)	(AEP,UK)
**********			

Ref. No.	Part No.	Description	Remark
		PARTS FOR INSTALLATION AND CONNCTIONS	
		**********	
301	X-3382-647-1	FRAME ASSY, FITTING	
302	X-3366-405-1	SCREW ASSY (EXP), FITTING	
303	3-934-325-01	SCREW (+K 5X8 TP) (E)	
304	3-264-055-01	COLLAR	
305	1-465-459-21	ADAPTOR, ANTENNA (AEP,UK)	
306	3-246-471-01	KEY (FRAME)	
307	1-776-207-72	CORD (WITH CONNECTOR) (E)	
308	1-776-527-71	CORD (WITH CONNECTOR) (ISO) (POWER)	(AEP,UK)

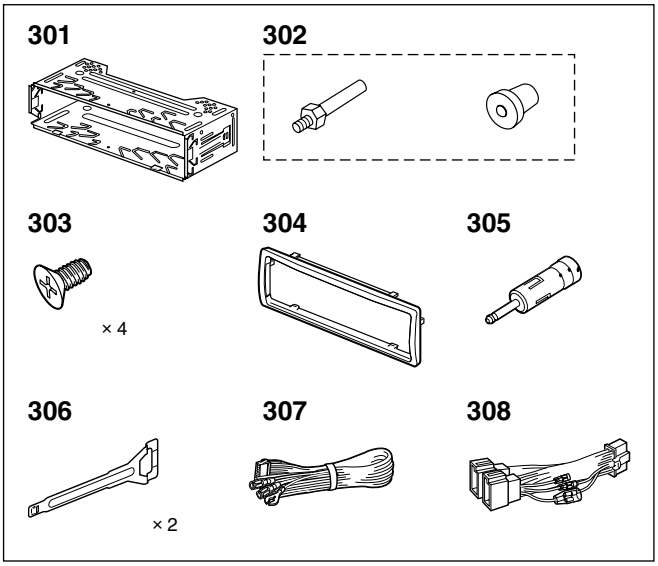

The components identified by mark ⚠ or dotted line with mark. ⚠ are critical for safety.
Replace only with part number specified.

MEMO

REVISION HISTORY

Clicking the version allows you to jump to the revised page.
Also, clicking the version at the upper on the revised page allows you to jump to the next revised page.

Ver.	Date	Description of Revision
1.0	2004. 02	New
1.1	2004. 04	Addition of Q620. (SPM-04005)

www.mobiteh.com